2026 Teryx KRX4 1000 Blackout Edition

Kawasaki
Let the Good Times Roll®

PARTS DIAGRAM

Fuel Tank(CN,US)

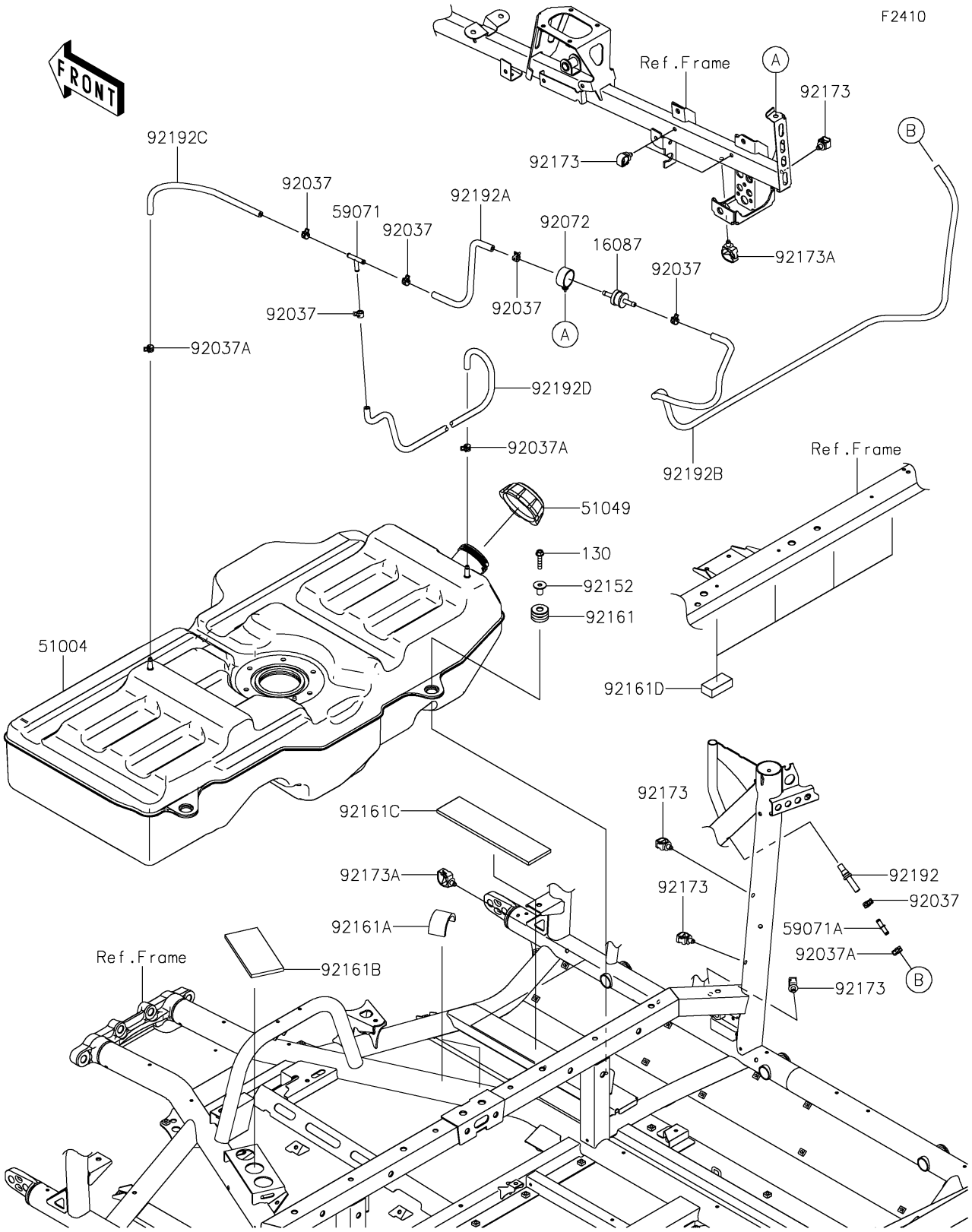

© 2026 Kawasaki Motors Corp., U.S.A.

2026 Teryx KRX4 1000 Blackout Edition

Kawasaki
Let the Good Times Roll®

PARTS LIST

Fuel Tank(CN,US)

ITEM NAME	PART NUMBER	QUANTITY
VALVE-CHECK (Ref # 16087)	16087-0008	1
TANK-FUEL (Ref # 51004)	51004-0044	1
CAP-TANK,FUEL (Ref # 51049)	51049-0718	1
JOINT (Ref # 59071)	59071-3705	1
JOINT (Ref # 59071A)	59071-3717	1
CLAMP,TUBE (Ref # 92037)	92037-1461	6
CLAMP (Ref # 92037A)	92037-2113	3
BAND (Ref # 92072)	92072-0850	1
COLLAR,6.8X10X18.1 (Ref # 92152)	92152-1867	3
DAMPER,TANK (Ref # 92161)	92161-2178	3
DAMPER,TANK FRAME PIPE (Ref # 92161A)	92161-2179	2
DAMPER,TANK LH LOWER (Ref # 92161B)	92161-2180	1
DAMPER,TANK LOWER (Ref # 92161C)	92161-2253	1
DAMPER,TANK & SEAT FRAME (Ref # 92161D)	92161-2275	4
CLAMP,12MM DIA. (Ref # 92173)	92173-0736	6
CLAMP (Ref # 92173A)	92173-0861	3
TUBE,FRAME PIPE-CHECK VALVE (Ref # 92192)	92192-0068	1
TUBE,5X10X245.4 (Ref # 92192A)	92192-2567	1
TUBE,5X10X1319.4 (Ref # 92192B)	92192-2568	1
TUBE,5X10X280 (Ref # 92192C)	92192-2569	1
TUBE,5X10X785 (Ref # 92192D)	92192-2570	1
BOLT-FLANGED,6X30 (Ref # 130)	130BA0630	3

© 2026 Kawasaki Motors Corp., U.S.A.