2027 TERYX® KRX4™ 1000 BLACKOUT EDITION

Kawasaki
Let the Good Times Roll®

PARTS DIAGRAM

Water Pump

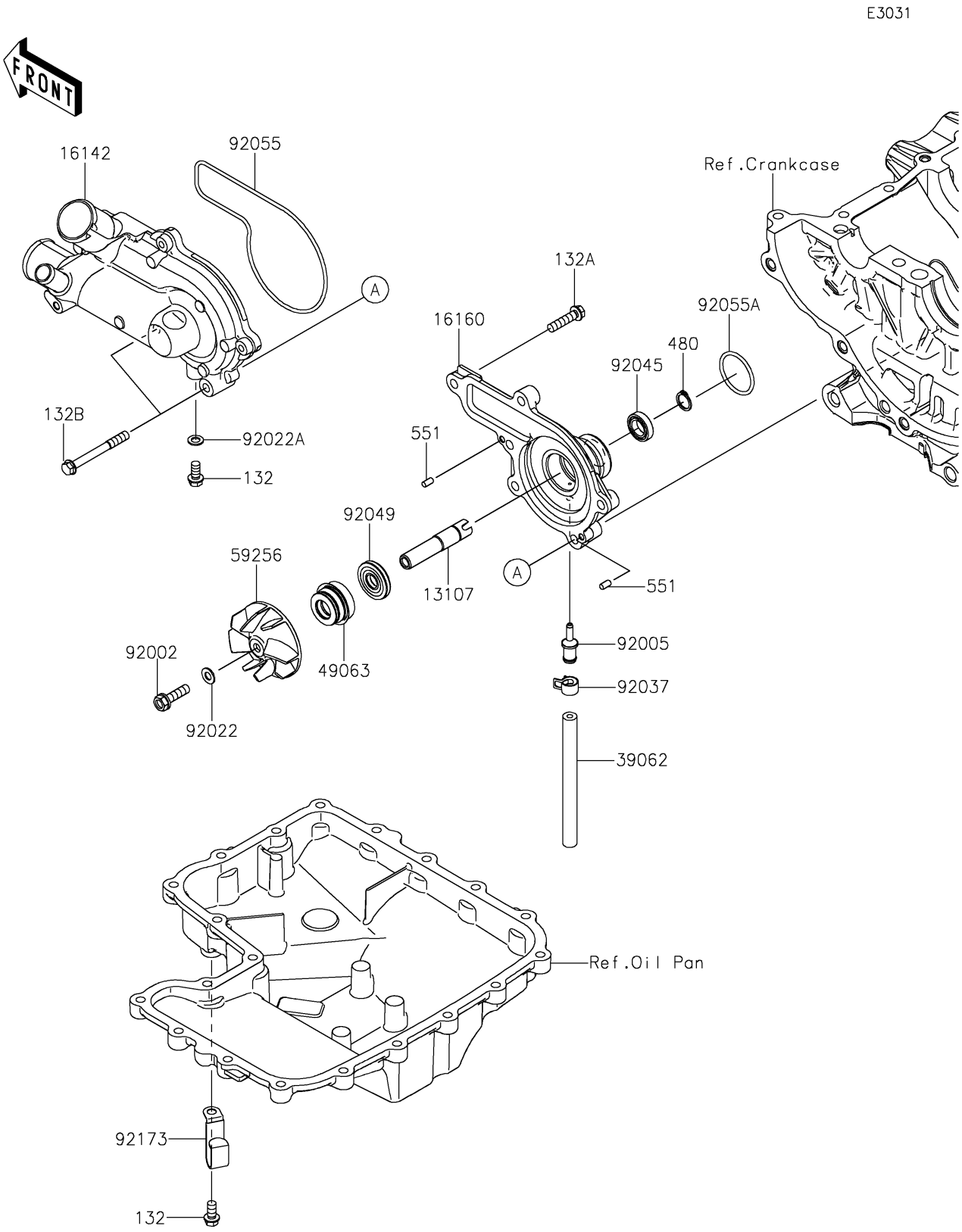

© 2026 Kawasaki Motors Corp., U.S.A.

2027 TERYX® KRX4™ 1000 BLACKOUT EDITION

Kawasaki
Let the Good Times Roll®

PARTS LIST

Water Pump

ITEM NAME	PART NUMBER	QUANTITY
SHAFT,WATER PUMP BODY (Ref # 13107)	13107-0894	1
COVER-PUMP,WATER (Ref # 16142)	16142-0756	1
BODY,WATER PUMP (Ref # 16160)	16160-0833	1
HOSE-COOLING,7.5X10.5X280 (Ref # 39062)	39062-1949	1
SEAL-MECHANICAL (Ref # 49063)	49063-1055	1
IMPELLER (Ref # 59256)	59256-0017	1
BOLT,6X22 (Ref # 92002)	92002-1154	1
FITTING (Ref # 92005)	92005-1482	1
WASHER,6.1X12X1 (Ref # 92022)	92022-077	1
WASHER,6.2X11X1 (Ref # 92022A)	92022-304	1
CLAMP (Ref # 92037)	92037-2113	1
BEARING-BALL,6801 (Ref # 92045)	92045-0971	1
SEAL-OIL (Ref # 92049)	92049-0778	1
RING-O,WATER PUMP COVER (Ref # 92055)	92055-0921	1
RING-O,28.7X2.4 (Ref # 92055A)	92055-0922	1
CLAMP (Ref # 92173)	92173-2336	1
BOLT-FLANGED-SMALL,6X12 (Ref # 132)	132BA0612	2
BOLT-FLANGED-SMALL,6X25 (Ref # 132A)	132BA0625	4
BOLT-FLANGED-SMALL,6X55 (Ref # 132B)	132BA0655	2
CIRCLIP-TYPE-C,12MM (Ref # 480)	480J1200	1
PIN-DOWEL,4X8 (Ref # 551)	551A0408	2

© 2026 Kawasaki Motors Corp., U.S.A.