2025 Teryx KRX4 1000 Blackout Edition

Kawasaki
Let the Good Times Roll®

PARTS DIAGRAM

Gear Change Mechanism

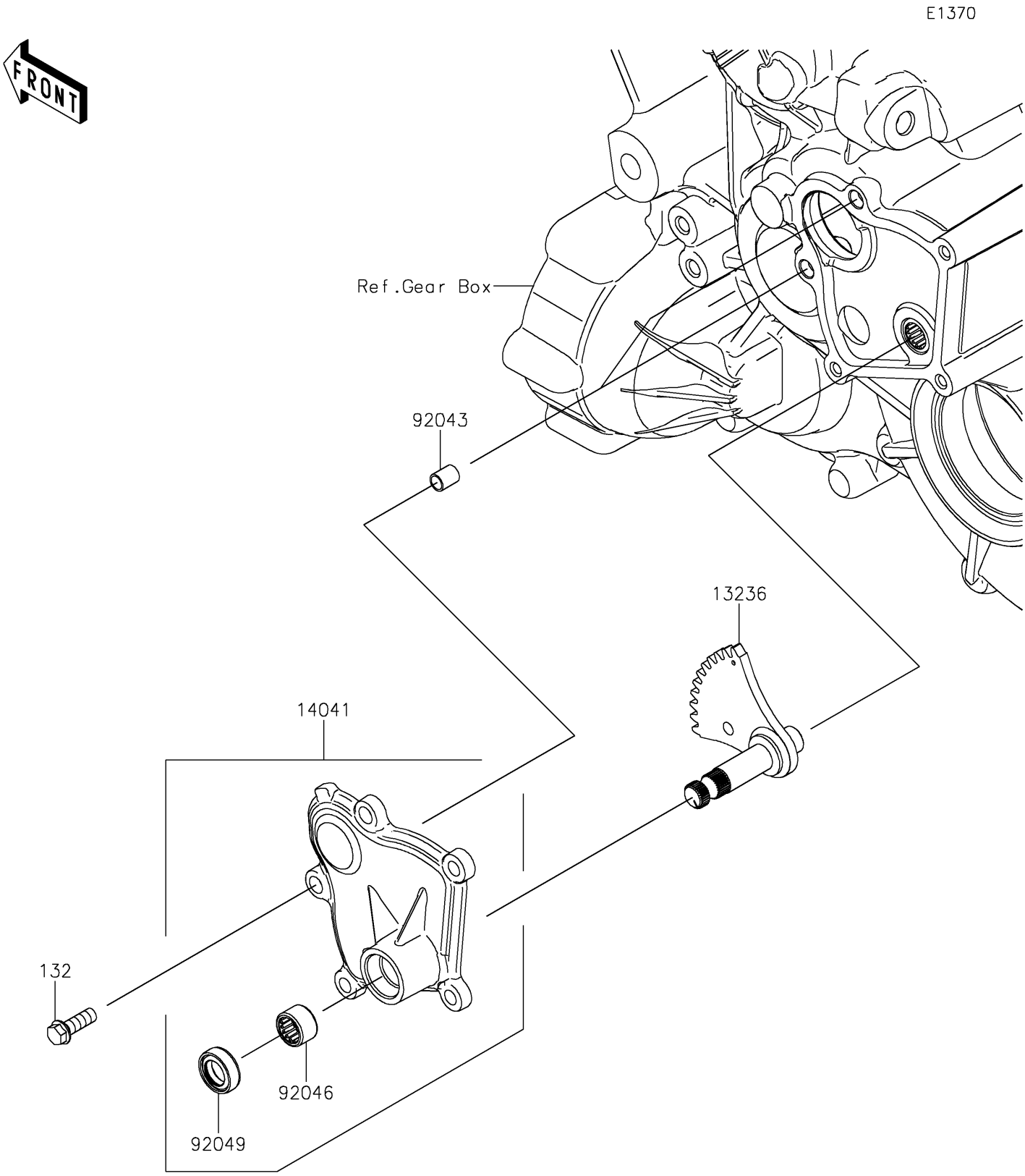

© 2026 Kawasaki Motors Corp., U.S.A.

2025 Teryx KRX4 1000 Blackout Edition

PARTS LIST

Gear Change Mechanism

ITEM NAME	PART NUMBER	QUANTITY

© 2026 Kawasaki Motors Corp., U.S.A.