2027 Teryx KRX 1000 Blackout Edition

Kawasaki
Let the Good Times Roll®

PARTS DIAGRAM

Fuel Tank(CA)

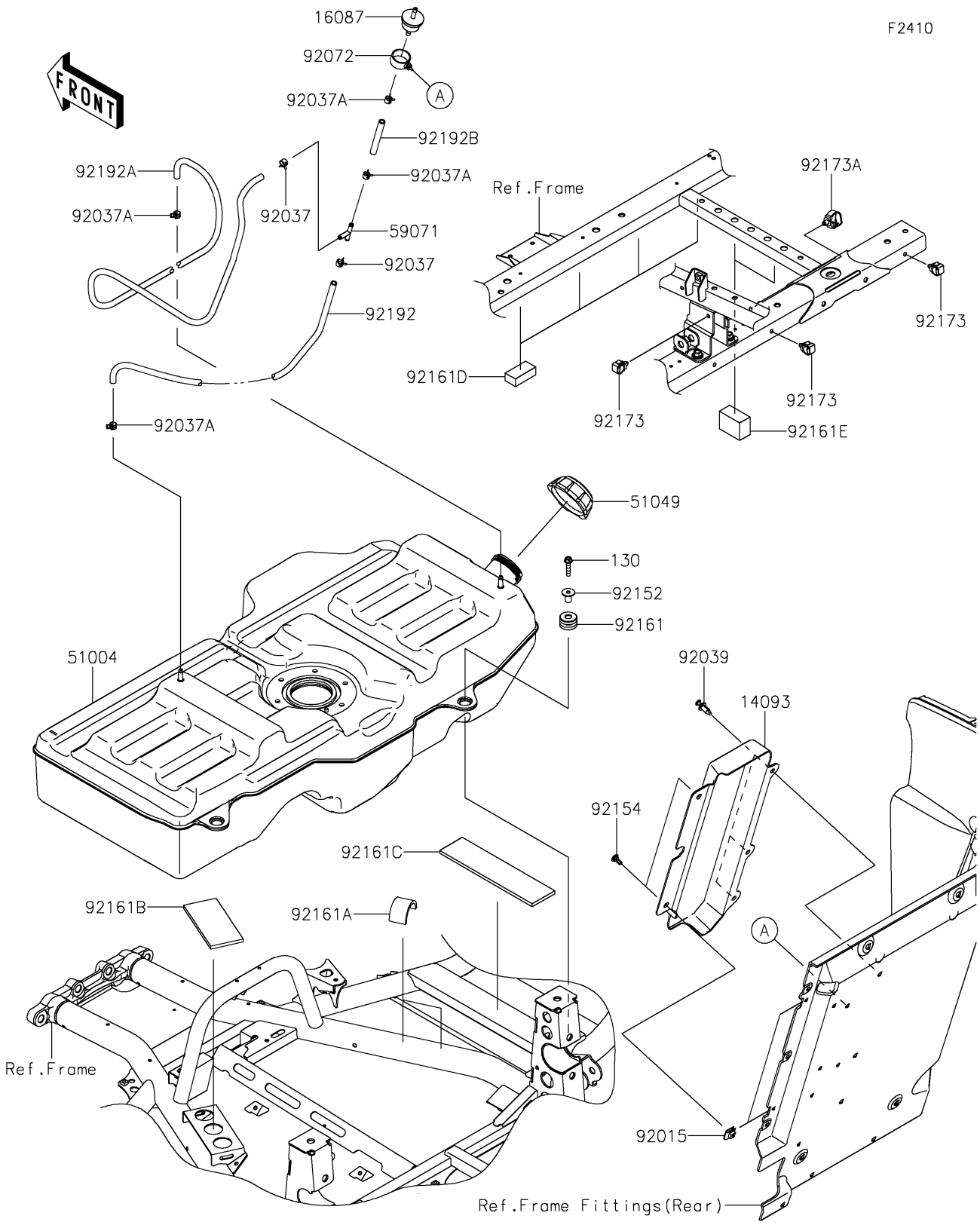

© 2026 Kawasaki Motors Corp., U.S.A.

2027 Teryx KRX 1000 Blackout Edition

Kawasaki
Let the Good Times Roll®

PARTS LIST

Fuel Tank(CA)

ITEM NAME	PART NUMBER	QUANTITY
COVER,BREATHER PIPE (Ref # 14093)	14093-0987	1
VALVE-CHECK (Ref # 16087)	16087-0011	1
TANK-FUEL (Ref # 51004)	51004-0044	1
CAP-TANK,FUEL (Ref # 51049)	51049-0718	1
JOINT (Ref # 59071)	59071-3705	1
NUT,CLAMP,6MM (Ref # 92015)	92015-1678	2
CLAMP,TUBE (Ref # 92037)	92037-1461	2
CLAMP (Ref # 92037A)	92037-2113	4
RIVET (Ref # 92039)	92039-0865	3
BAND (Ref # 92072)	92072-0852	1
COLLAR,6.8X10X18.1 (Ref # 92152)	92152-1867	3
BOLT (Ref # 92154)	92154-3957	2
DAMPER,TANK (Ref # 92161)	92161-2178	3
DAMPER,TANK FRAME PIPE (Ref # 92161A)	92161-2179	2
DAMPER,TANK LH LOWER (Ref # 92161B)	92161-2180	1
DAMPER,TANK LOWER (Ref # 92161C)	92161-2253	1
DAMPER,TANK & SEAT FRAME (Ref # 92161D)	92161-2275	4
DAMPER,TANK & SEAT FRAME (Ref # 92161E)	92161-2288	2
CLAMP,12MM DIA. (Ref # 92173)	92173-0736	3
CLAMP (Ref # 92173A)	92173-0861	1
TUBE,5X10X1020 (Ref # 92192)	92192-2239	1
TUBE,5X10X1380 (Ref # 92192A)	92192-2352	1
TUBE,5X10.4X80 (Ref # 92192B)	92192-2531	1
BOLT-FLANGED,6X30 (Ref # 130)	130BA0630	3

© 2026 Kawasaki Motors Corp., U.S.A.