2027 Teryx KRX 1000 Blackout Edition

Kawasaki
Let the Good Times Roll®

PARTS DIAGRAM

Steering Wheel

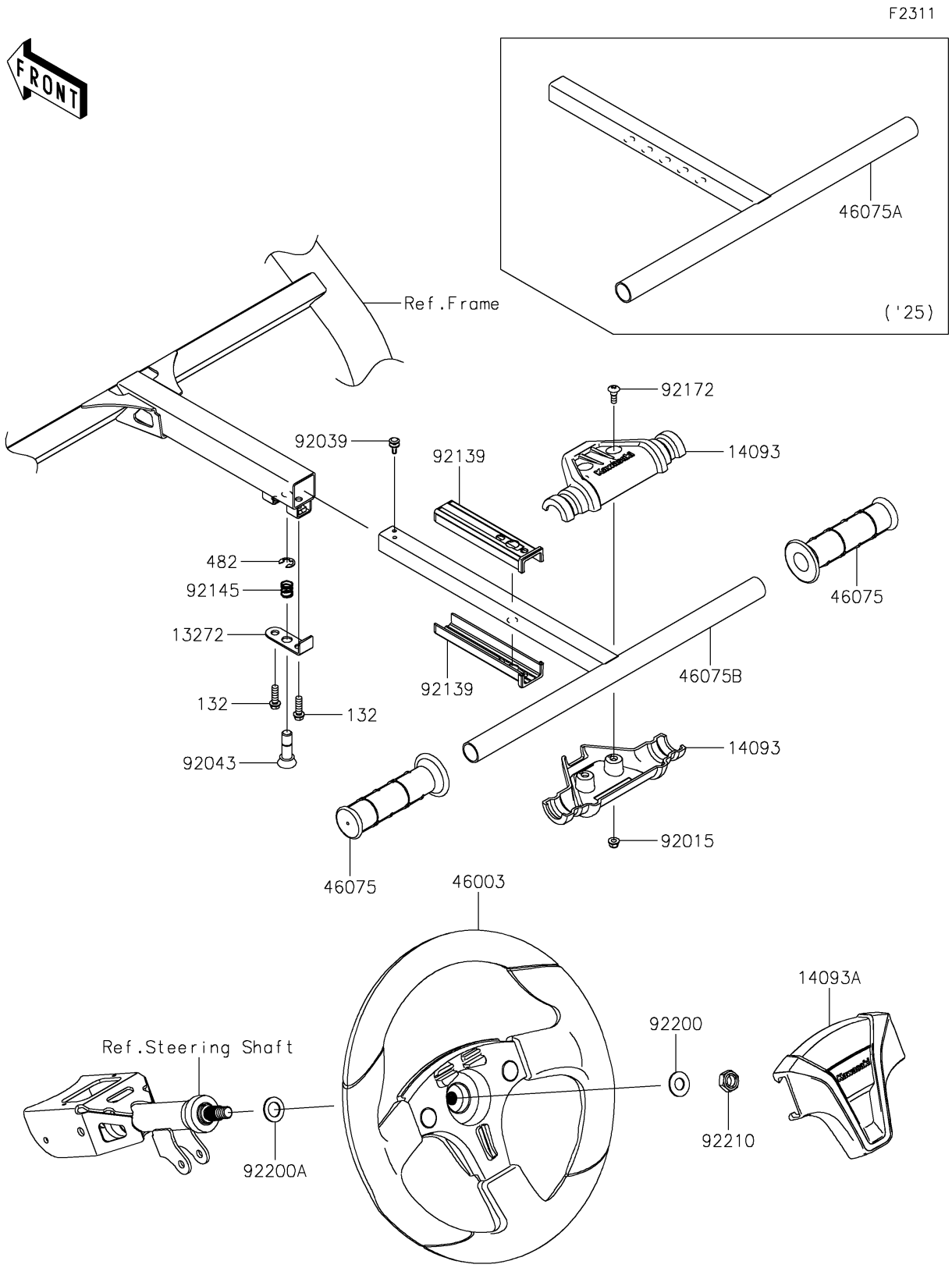

© 2026 Kawasaki Motors Corp., U.S.A.

2027 Teryx KRX 1000 Blackout Edition

Kawasaki
Let the Good Times Roll®

PARTS LIST

Steering Wheel

ITEM NAME	PART NUMBER	QUANTITY
PLATE (Ref # 13272)	13272-3869	1
COVER,PASSENGER GRIP (Ref # 14093)	14093-0802	2
COVER,HANDLE (Ref # 14093A)	14093-0803	1
HANDLE (Ref # 46003)	46003-0809	1
GRIP (Ref # 46075)	46075-0065	2
GRIP,HANDLE,INNER (Ref # 46075B)	46075-0708	1
NUT,LOCK,FLANGED,5MM (Ref # 92015)	92015-1752	2
RIVET (Ref # 92039)	92039-0046	2
PIN (Ref # 92043)	92043-7503	1
BUSHING (Ref # 92139)	92139-1143	2
SPRING (Ref # 92145)	92145-7507	1
SCREW,5MM (Ref # 92172)	92172-0261	2
WASHER,12.1X25X1.6 (Ref # 92200)	92200-0455	1
WASHER,15X25X1.6 (Ref # 92200A)	92200-0460	1
NUT,LOCK,12MM (Ref # 92210)	92210-1249	1
BOLT-FLANGED-SMALL,6X20 (Ref # 132)	132BB0620	2
CIRCLIP-TYPE-E,8MM (Ref # 482)	482EA8000	1

© 2026 Kawasaki Motors Corp., U.S.A.