2027 Teryx KRX 1000 Blackout Edition

Kawasaki
Let the Good Times Roll®

PARTS DIAGRAM

Brake Pedal/Throttle Lever

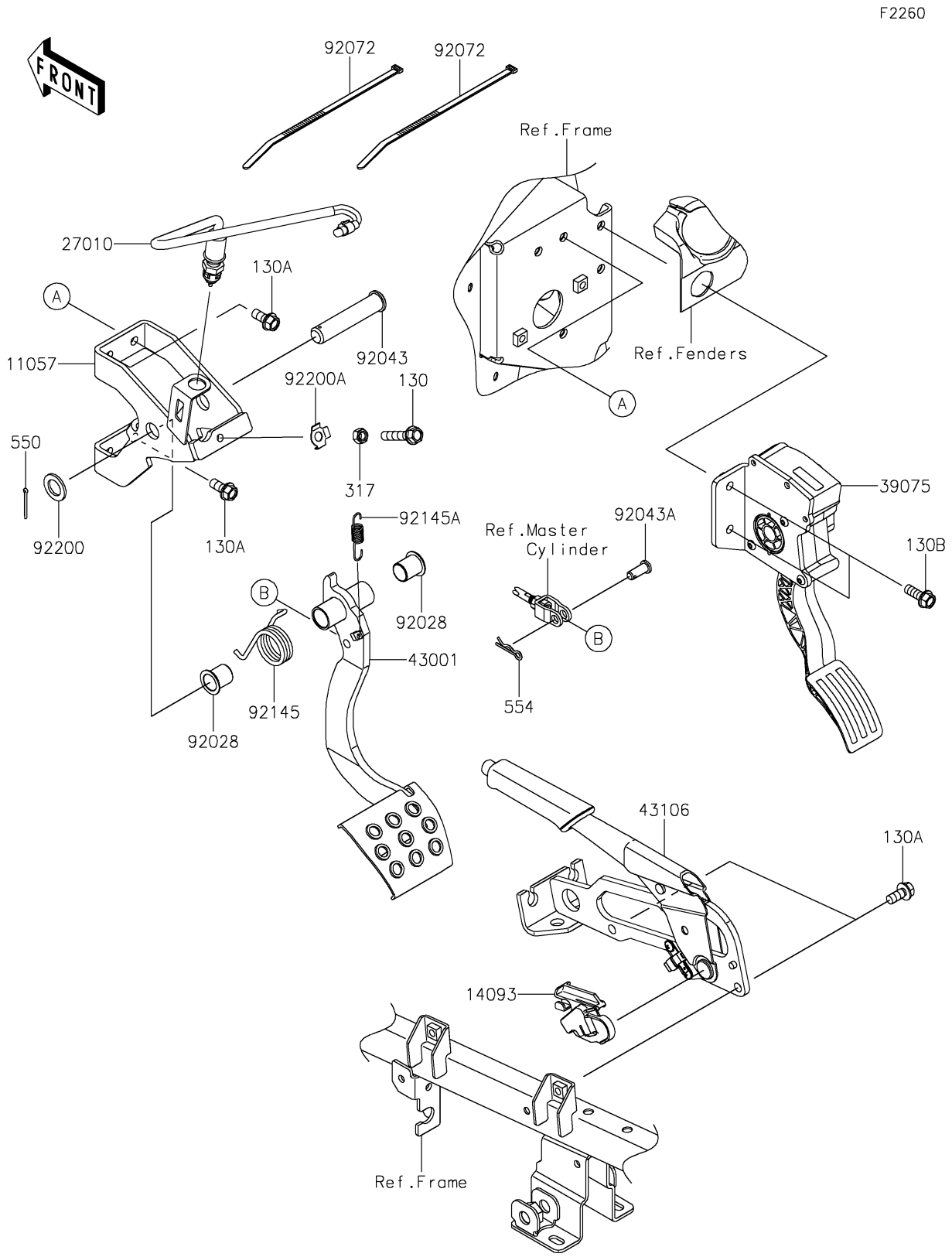

© 2026 Kawasaki Motors Corp., U.S.A.

2027 Teryx KRX 1000 Blackout Edition

Kawasaki
Let the Good Times Roll®

PARTS LIST

Brake Pedal/Throttle Lever

ITEM NAME	PART NUMBER	QUANTITY
BRACKET,BRAKE PEDAL (Ref # 11057)	11057-2099	1
COVER,SWITCH (Ref # 14093)	14093-1021	1
SWITCH,BRAKE (Ref # 27010)	27010-0724	1
LEVER-THROTTLE (Ref # 39075)	39075-0033	1
LEVER-BRAKE (Ref # 43001)	43001-0767	1
LEVER-ASSY-PARKING BRAKE (Ref # 43106)	43106-0013	1
BUSHING (Ref # 92028)	92028-1571	2
PIN,16X78 (Ref # 92043)	92043-0917	1
PIN (Ref # 92043A)	92043-1039	1
BAND,L=292.1 (Ref # 92072)	92072-3509	2
SPRING (Ref # 92145)	92145-1849	1
SPRING (Ref # 92145A)	92145-1884	1
WASHER,16X26X2.3 (Ref # 92200)	92200-0043	1
WASHER,8.5X17X0.8 (Ref # 92200A)	92200-0993	1
BOLT-FLANGED,8X40 (Ref # 130)	130BA0840	1
BOLT-FLANGED,8X18 (Ref # 130A)	130CA0818	5
BOLT-FLANGED,8X22 (Ref # 130B)	130CB0822	2
NUT-HEX-SMALL,8MM (Ref # 317)	317BA0800	1
PIN-COTTER,2.5X25 (Ref # 550)	550AA2525	1
PIN-SNAP,10MM (Ref # 554)	554DA1000	1

© 2026 Kawasaki Motors Corp., U.S.A.