2027 Teryx KRX 1000 Blackout Edition

Kawasaki
Let the Good Times Roll®

PARTS DIAGRAM

Frame Fittings(Front)

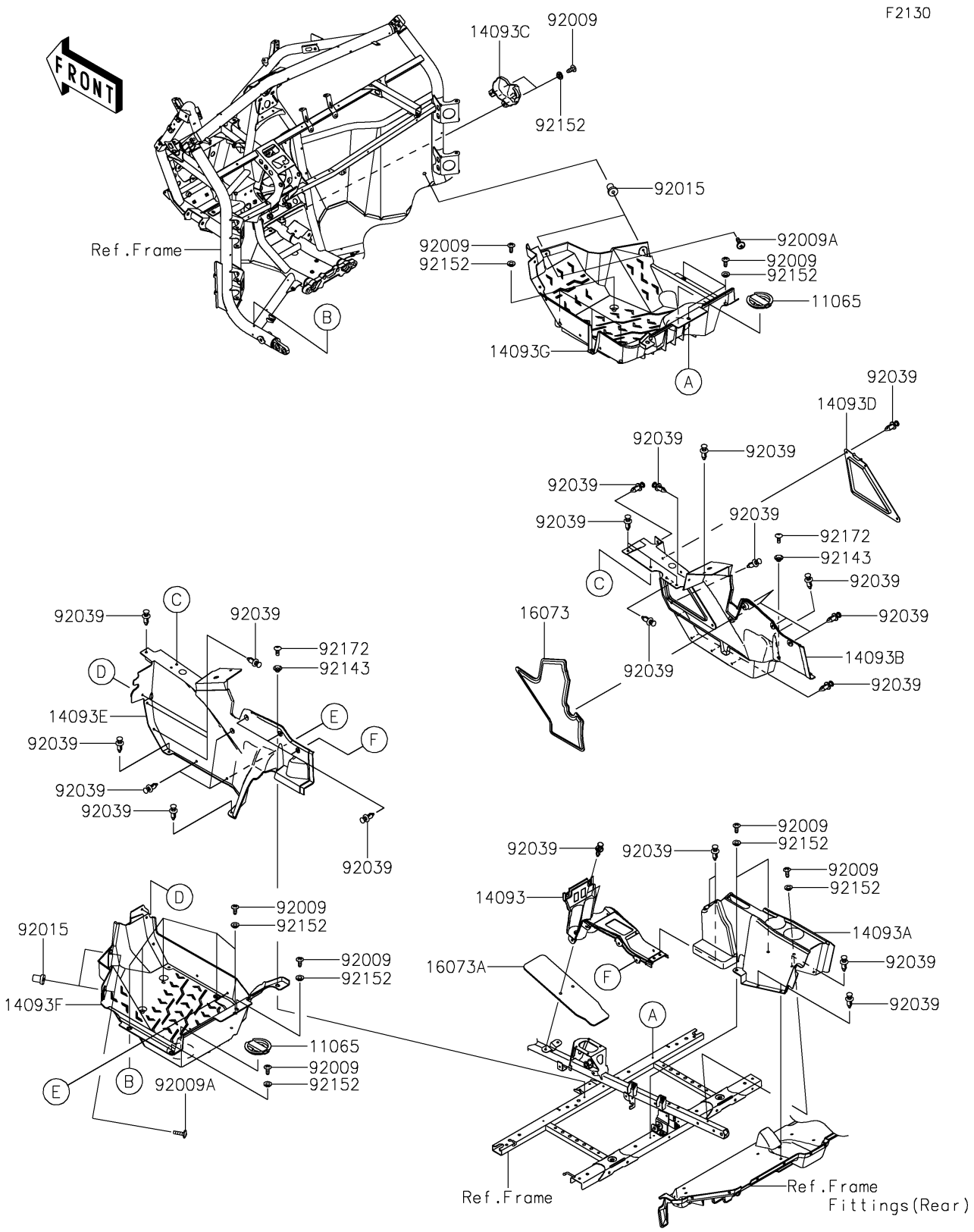

© 2026 Kawasaki Motors Corp., U.S.A.

2027 Teryx KRX 1000 Blackout Edition

Kawasaki
Let the Good Times Roll®

PARTS LIST

Frame Fittings(Front)

ITEM NAME	PART NUMBER	QUANTITY
CAP,FLOOR (Ref # 11065)	11065-1423	2
COVER,CENTER CONSOLE,FR (Ref # 14093)	14093-0833	1
COVER,CENTER CONSOLE,RR (Ref # 14093A)	14093-0834	1
COVER,FLOOR,CNT,RH (Ref # 14093B)	14093-0838	1
COVER,FR GEAR,SIDE (Ref # 14093C)	14093-0839	1
COVER,MAINTENANCE (Ref # 14093D)	14093-0850	1
COVER,FLOOR,CNT,LH (Ref # 14093E)	14093-1161	1
COVER,FLOOR,LH (Ref # 14093F)	14093-1208	1
COVER,FLOOR,RH (Ref # 14093G)	14093-1209	1
INSULATOR (Ref # 16073)	16073-0898	1
INSULATOR (Ref # 16073A)	16073-0940	1
SCREW,TAPPING,6X16 (Ref # 92009)	92009-1166	19
SCREW,6X22,BLACK (Ref # 92009A)	92009-1256	4
NUT,RUBBER,6MM (Ref # 92015)	92015-1692	4
RIVET (Ref # 92039)	92039-0865	41
COLLAR (Ref # 92143)	92143-1057	2
COLLAR,6.3X9.5X4.1 (Ref # 92152)	92152-1571	19
SCREW,TAPPING,6X16 (Ref # 92172)	92172-0739	2

© 2026 Kawasaki Motors Corp., U.S.A.