2027 Vulcan S CAFÉ

PARTS DIAGRAM

Accessory(Passenger Backrest)

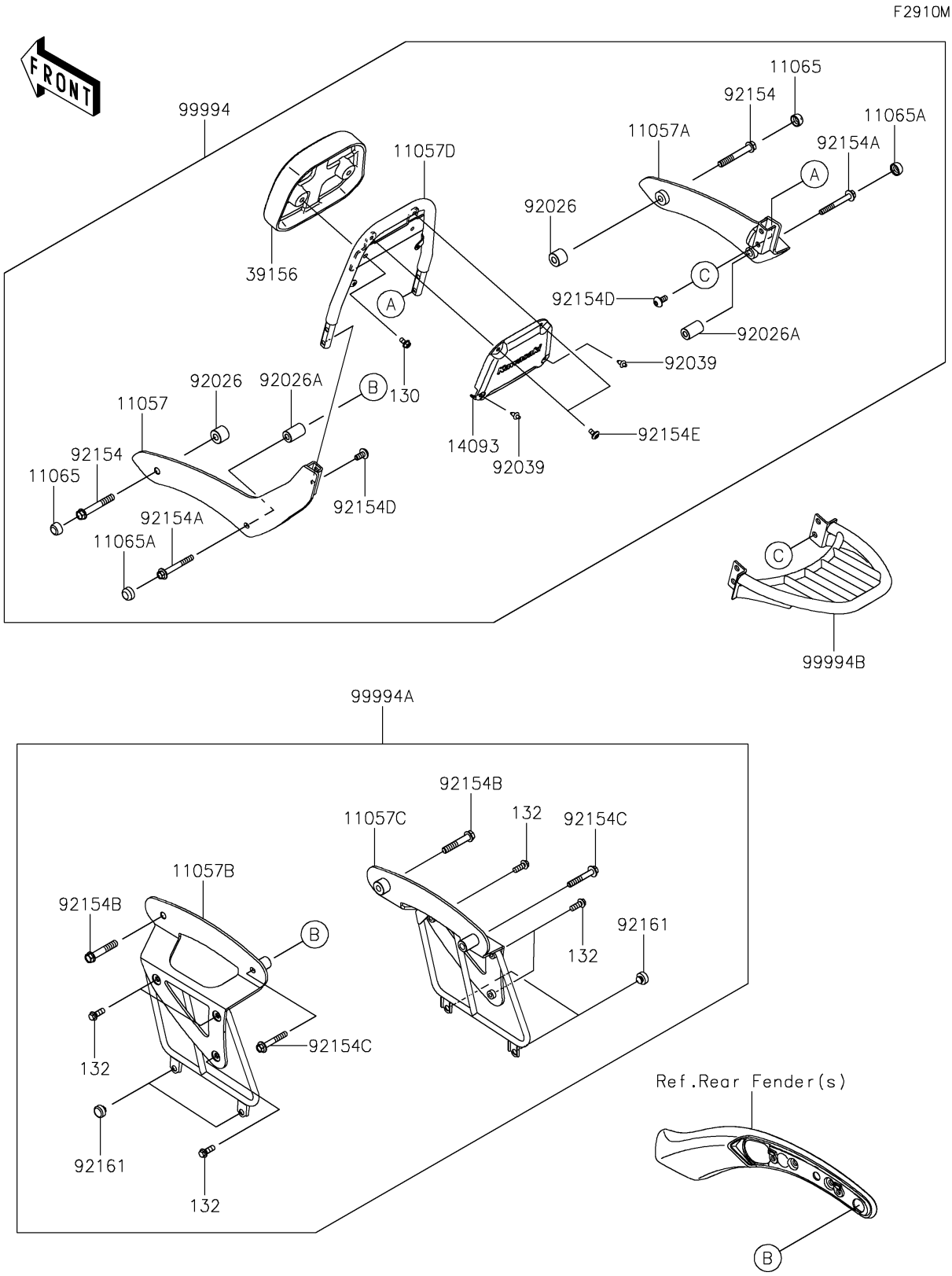

© 2026 Kawasaki Motors Corp., U.S.A.

2027 Vulcan S CAFÉ

PARTS LIST

Accessory(Passenger Backrest)

Kawasaki
Let the Good Times Roll®

ITEM NAME	PART NUMBER	QUANTITY
BRACKET,SIDE PLATE,LH (Ref # 11057)	11057-0179	1
BRACKET,SIDE PLATE,RH (Ref # 11057A)	11057-0181	1
BRACKET,LH (Ref # 11057B)	11057-0186	1
BRACKET,RH (Ref # 11057C)	11057-0188	1
BRACKET,SISSYBAR (Ref # 11057D)	11057-0218	1
CAP,14 (Ref # 11065)	11065-0977	2
CAP (Ref # 11065A)	11065-1195	2
COVER (Ref # 14093)	14093-0504	1
PAD,SEAT (Ref # 39156)	39156-5007	1
SPACER (Ref # 92026)	92026-0823	2
SPACER (Ref # 92026A)	92026-0824	2
RIVET (Ref # 92039)	92039-0068	2
BOLT,FLANGED,10X70 (Ref # 92154)	92154-2227	2
BOLT,FLANGED,8X68 (Ref # 92154A)	92154-2228	2
BOLT,FLANGED,10X57 (Ref # 92154B)	92154-2229	2
BOLT,FLANGED,8X55 (Ref # 92154C)	92154-2230	2
BOLT,SOCKET,8X18 (Ref # 92154D)	92154-2239	4
BOLT,SOCKET,6X12 (Ref # 92154E)	92154-2497	2
DAMPER,10X20X8 (Ref # 92161)	92161-0855	4
KIT,PASSENGER BACKREST W/O KQR (Ref # 99994)	99994-0818	1
KIT,SADDLEBAG SPRT BKT W/O KQR (Ref # 99994A)	99994-0819	1
KIT-ACC,LUGGAGE RACK W/O KQR (Ref # 99994B)	99994-0846	1
BOLT-FLANGED,6X12 (Ref # 130)	130BA0612	2
BOLT-FLANGED-SMALL,8X22 (Ref # 132)	132BA0822	6

© 2026 Kawasaki Motors Corp., U.S.A.