2027 Vulcan S CAFÉ

PARTS DIAGRAM

Rear Brake

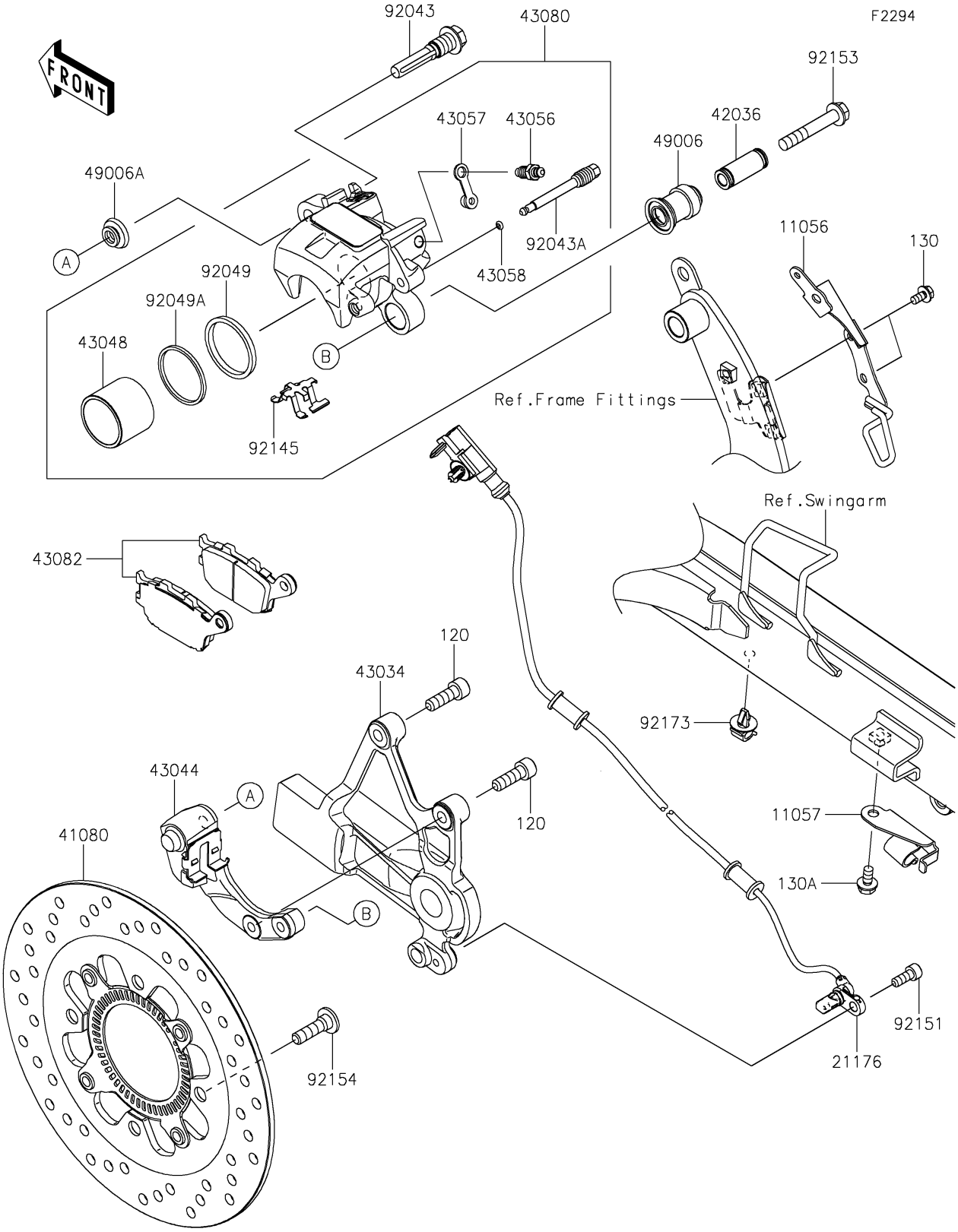

© 2026 Kawasaki Motors Corp., U.S.A.

2027 Vulcan S CAFÉ

PARTS LIST

Rear Brake

ITEM NAME	PART NUMBER	QUANTITY
BRACKET,SENSOR (Ref # 11056)	11056-4199	1
BRACKET,SWINGARM,LWR (Ref # 11057)	11057-3989	1
SENSOR,RR WHEEL SPEED (Ref # 21176)	21176-0954	1
DISC,RR,W/R,BLACK (Ref # 41080)	41080-0628-11H	1
SLEEVE (Ref # 42036)	42036-0050	1
HOLDER-BRAKE,RR (Ref # 43034)	43034-0161	1
HOLDER-COMP-CALIPER (Ref # 43044)	43044-0080	1
PISTON-CALIPER (Ref # 43048)	43048-0008	1
BREATHER (Ref # 43056)	43056-1055	1
CAP-BREATHER (Ref # 43057)	43057-1001	1
RING,STOPPER (Ref # 43058)	43058-1100	1
CALIPER-SUB-ASSY,RR,BLACK (Ref # 43080)	43080-0156-DJ	1
PAD-ASSY-BRAKE (Ref # 43082)	43082-0155	1
BOOT (Ref # 49006)	49006-0058	1
BOOT,CALIPER (Ref # 49006A)	49006-1242	1
PIN (Ref # 92043)	92043-0137	1
PIN,HANGER (Ref # 92043A)	92043-0820	1
SEAL-OIL (Ref # 92049)	92049-1449	1
SEAL-OIL (Ref # 92049A)	92049-1450	1
SPRING,PAD (Ref # 92145)	92145-0493	1
BOLT (Ref # 92151)	92151-1166	1
BOLT,FLANGED (Ref # 92153)	92153-1826	1
BOLT,SOCKET,8X30 (Ref # 92154)	92154-0844	4
CLAMP,CABLE CLIP (Ref # 92173)	92173-1022	1
BOLT-SOCKET,8X25 (Ref # 120)	120CB0825	2
BOLT-FLANGED,5X10 (Ref # 130)	130BA0510	2
BOLT-FLANGED,6X12 (Ref # 130A)	130BA0612	1

© 2026 Kawasaki Motors Corp., U.S.A.