2027 Vulcan S CAFÉ

PARTS DIAGRAM

Crankcase

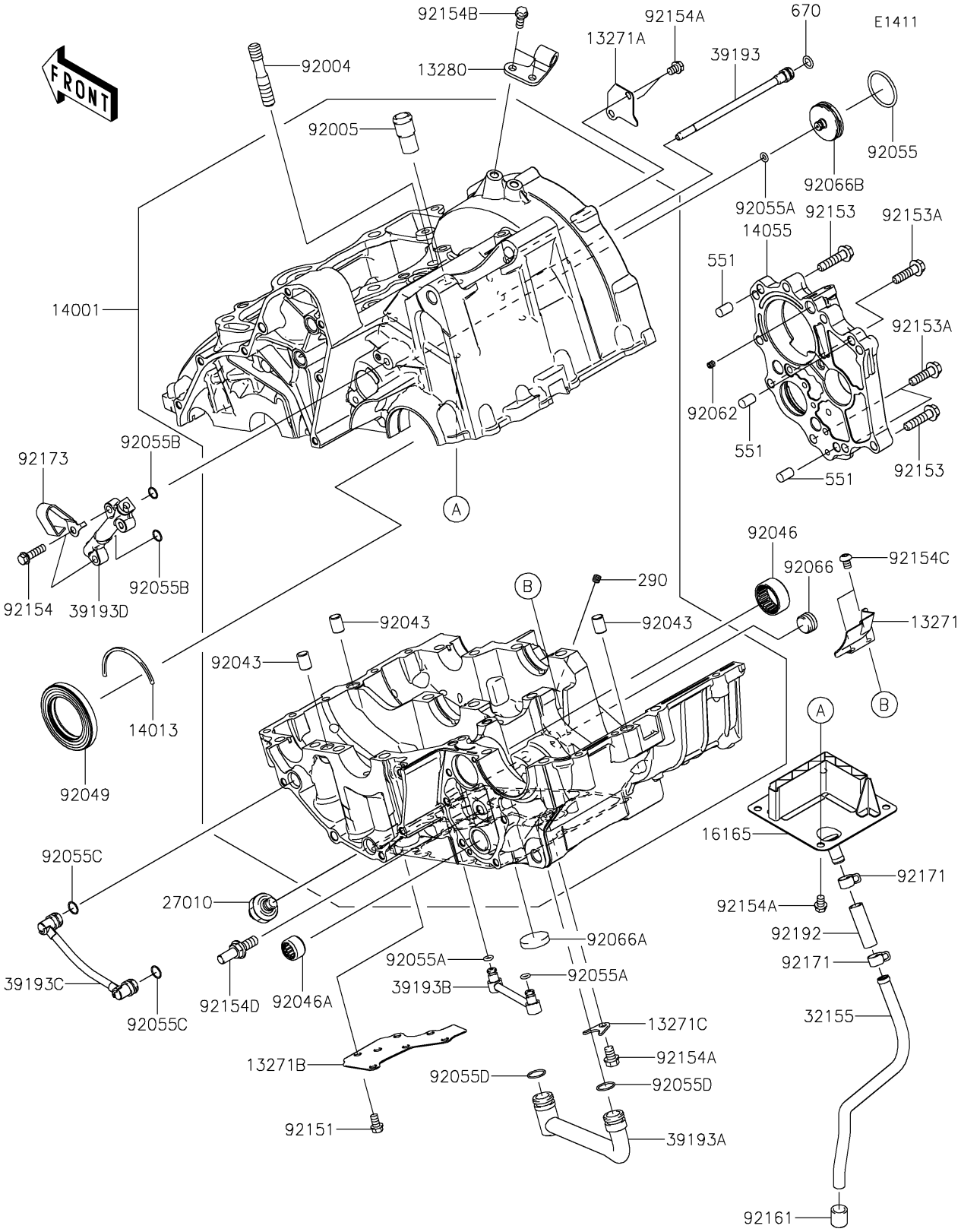

© 2026 Kawasaki Motors Corp., U.S.A.

2027 Vulcan S CAFÉ

PARTS LIST

Crankcase

ITEM NAME	PART NUMBER	QUANTITY
PLATE,OIL SHIELDING (Ref # 13271)	13271-0575	1
PLATE (Ref # 13271A)	13271-0577	1
PLATE (Ref # 13271B)	13271-0584	1
PLATE,OIL PIPE (Ref # 13271C)	13271-1187	1
HOLDER,CLUTCH CABLE (Ref # 13280)	13280-0224	1
SET-CRANKCASE (Ref # 14001)	14001-0715	1
RING-POSITION,T=1.98 (Ref # 14013)	14013-1004	1
CASE-GEAR,TRANSMISSION (Ref # 14055)	14055-0051	1
SEPARATOR,BREATHER (Ref # 16165)	16165-0056	1
SWITCH,OIL PRESSURE (Ref # 27010)	27010-1313	1
PIPE,BREATHER (Ref # 32155)	32155-0891	1
PIPE-OIL (Ref # 39193)	39193-0564	1
PIPE-OIL (Ref # 39193A)	39193-0565	1
PIPE-OIL (Ref # 39193B)	39193-0566	1
PIPE-OIL (Ref # 39193C)	39193-0567	1
PIPE-OIL (Ref # 39193D)	39193-0569	1
STUD,10X34.5 (Ref # 92004)	92004-0024	1
FITTING,BREATHER (Ref # 92005)	92005-0713	1
PIN,DOWEL,10X14 (Ref # 92043)	92043-1037	3
BEARING-NEEDLE,24BTM3013 (Ref # 92046)	92046-0017	1
BEARING-NEEDLE,HK1312 (Ref # 92046A)	92046-1148	1
SEAL-OIL,HTC40628 (Ref # 92049)	92049-1501	1
RING-O,29.7X2.4 (Ref # 92055)	92055-0006	1
RING-O,4.8MM (Ref # 92055A)	92055-0845	3
RING-O,8.8MM (Ref # 92055B)	92055-0846	2
RING-O,9.8MM (Ref # 92055C)	92055-0847	2
RING-O,13.8MM (Ref # 92055D)	92055-0848	2
NOZZLE,5X6,SILVER (Ref # 92062)	92062-1086	1
PLUG,PT3/8X10 (Ref # 92066)	92066-0003	1

© 2026 Kawasaki Motors Corp., U.S.A.

2027 Vulcan S CAFÉ

PARTS LIST

Crankcase

ITEM NAME	PART NUMBER	QUANTITY
PLUG,25X5 (Ref # 92066A)	92066-0061	1
PLUG,INPUT SHAFT (Ref # 92066B)	92066-0715	1
BOLT,FLANGED-SMALL,6X10 (Ref # 92151)	92151-1389	6
BOLT,FLANGED,6X30 (Ref # 92153)	92153-0962	6
BOLT,FLANGED,7X26 (Ref # 92153A)	92153-0963	3
BOLT,FLANGED,6X22 (Ref # 92154)	92154-0504	2
BOLT,FLANGED,6X8 (Ref # 92154A)	92154-0726	7
BOLT,FLANGED,6X14 (Ref # 92154B)	92154-0813	2
BOLT,SOCKET,6X8 (Ref # 92154C)	92154-1506	2
BOLT,8X20 (Ref # 92154D)	92154-4341	1
DAMPER (Ref # 92161)	92161-0267	1
CLAMP (Ref # 92171)	92171-1053	2
CLAMP (Ref # 92173)	92173-0059	1
TUBE,9X12X38 (Ref # 92192)	92192-0225	1
SCREW-SET-SOCKET,6X6 (Ref # 290)	290Q0606	1
PIN-DOWEL,8X14 (Ref # 551)	551A0814	3
O RING,8MM (Ref # 670)	670D1508	1

© 2026 Kawasaki Motors Corp., U.S.A.