2027 Vulcan S CAFÉ

PARTS DIAGRAM

Clutch

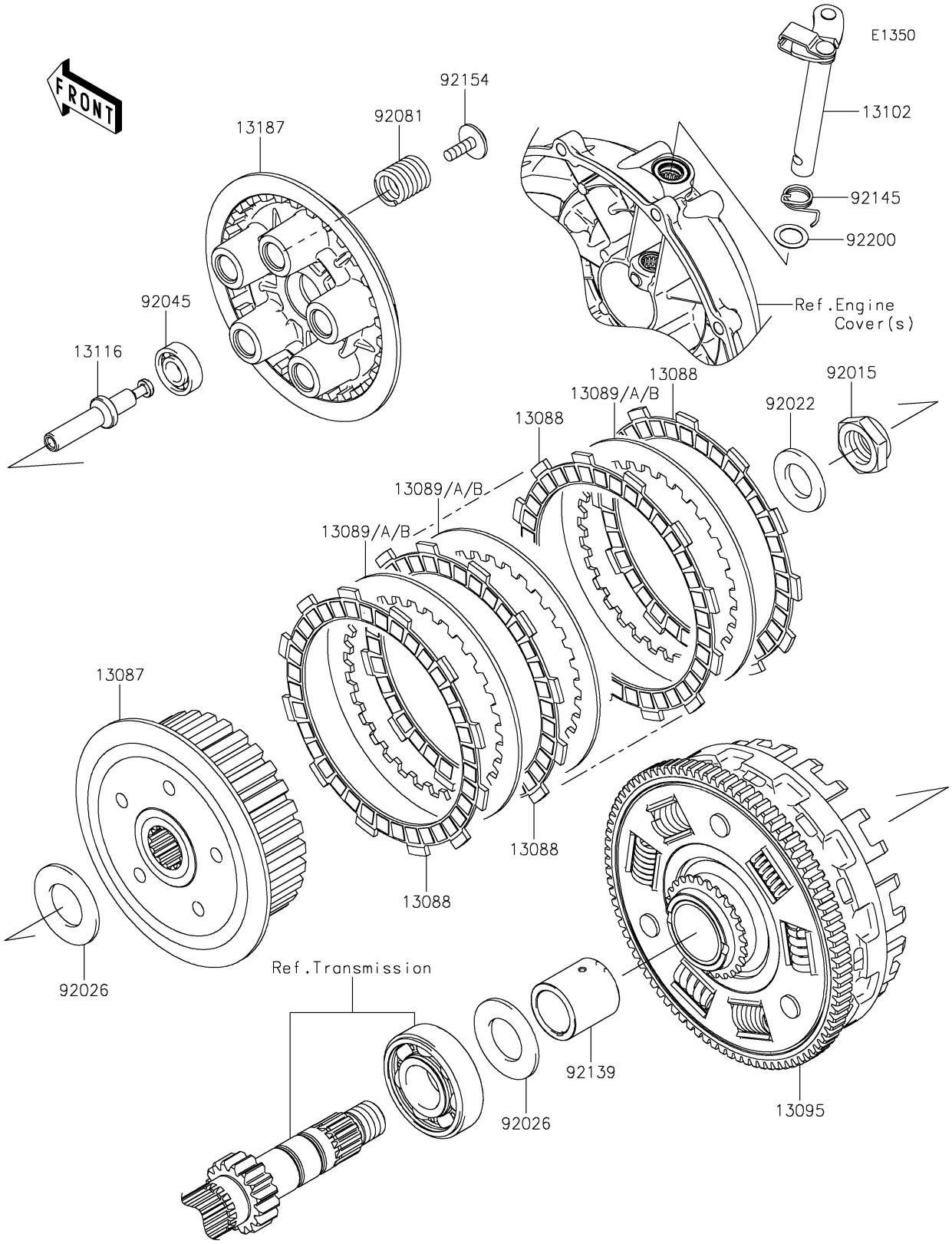

© 2026 Kawasaki Motors Corp., U.S.A.

2027 Vulcan S CAFÉ

PARTS LIST

Clutch

ITEM NAME	PART NUMBER	QUANTITY
HUB-CLUTCH (Ref # 13087)	13087-0046	1
PLATE-FRICTION (Ref # 13088)	13088-1105	7
PLATE-CLUTCH,T=2.3 (Ref # 13089)	13089-0016	6
PLATE-CLUTCH,T=2.6 (Ref # 13089A)	13089-0017	AR
PLATE-CLUTCH,T=2.0 (Ref # 13089B)	13089-026	AR
HOUSING-COMP-CLUTCH (Ref # 13095)	13095-0559	1
RELEASE-COMP-CLUTCH (Ref # 13102)	13102-0037	1
ROD-PUSH (Ref # 13116)	13116-0035	1
PLATE-CLUTCH OPERATING (Ref # 13187)	13187-0017	1
NUT,20MM (Ref # 92015)	92015-1555	1
WASHER,20.3X36X3.7 (Ref # 92022)	92022-1868	1
SPACER,25.5X47X2.5 (Ref # 92026)	92026-0716	2
BEARING-BALL,6001C3ML01 (Ref # 92045)	92045-1235	1
SPRING,CLUTCH (Ref # 92081)	92081-1033	5
BUSHING (Ref # 92139)	92139-0710	1
SPRING,CLUTCH RELEASE (Ref # 92145)	92145-0897	1
BOLT,UPSET-WP,6X20 (Ref # 92154)	92154-0079	5
WASHER,12X18.5X0.5 (Ref # 92200)	92200-1487	1

© 2026 Kawasaki Motors Corp., U.S.A.