2027 Vulcan S CAFÉ

PARTS DIAGRAM

Camshaft(s)/Tensioner

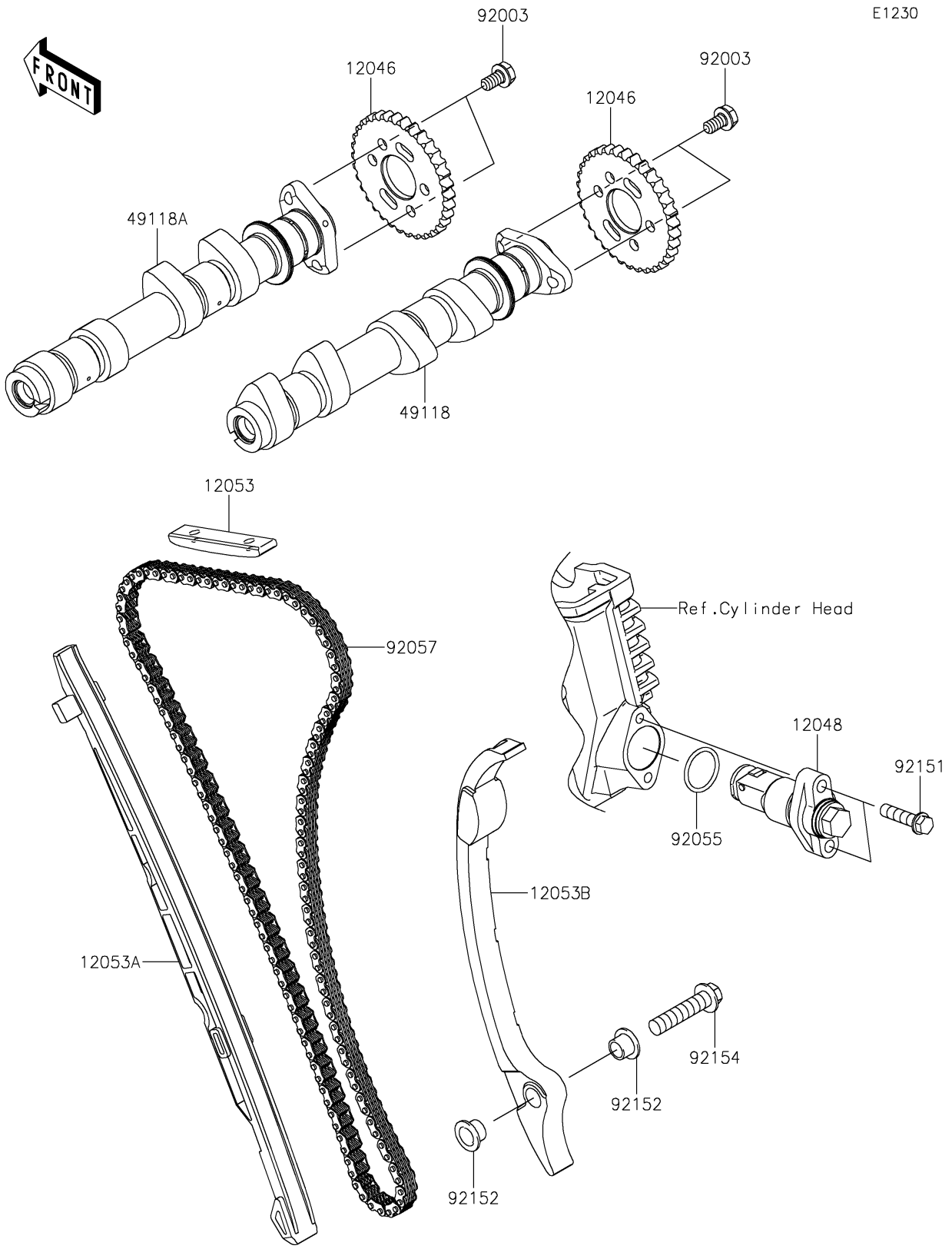

© 2026 Kawasaki Motors Corp., U.S.A.

2027 Vulcan S CAFÉ

PARTS LIST

Camshaft(s)/Tensioner

ITEM NAME	PART NUMBER	QUANTITY
SPROCKET,CAM,34T (Ref # 12046)	12046-0041	2
TENSIONER-ASSY (Ref # 12048)	12048-0102	1
GUIDE-CHAIN,UPP (Ref # 12053)	12053-0051	1
GUIDE-CHAIN,FR (Ref # 12053A)	12053-0059	1
GUIDE-CHAIN,RR (Ref # 12053B)	12053-0075	1
CAMSHAFT-COMP,IN (Ref # 49118)	49118-0951	1
CAMSHAFT-COMP,EX (Ref # 49118A)	49118-0952	1
BOLT,FLANGED,6X11 (Ref # 92003)	92003-208	4
RING-O,18.8X1.9 (Ref # 92055)	92055-086	1
CHAIN,CAM,92RH 2015-134M (Ref # 92057)	92057-0618	1
BOLT,FLANGED-SMALL,6X25 (Ref # 92151)	92151-1930	2
COLLAR,8.2X10.6X6.9 (Ref # 92152)	92152-0974	2
BOLT,FLANGED,8X35 (Ref # 92154)	92154-0725	1

© 2026 Kawasaki Motors Corp., U.S.A.