2027 Ninja ZX-4RR KRT Edition ABS

Kawasaki
Let the Good Times Roll®

PARTS DIAGRAM

Owner's Tools

F2810

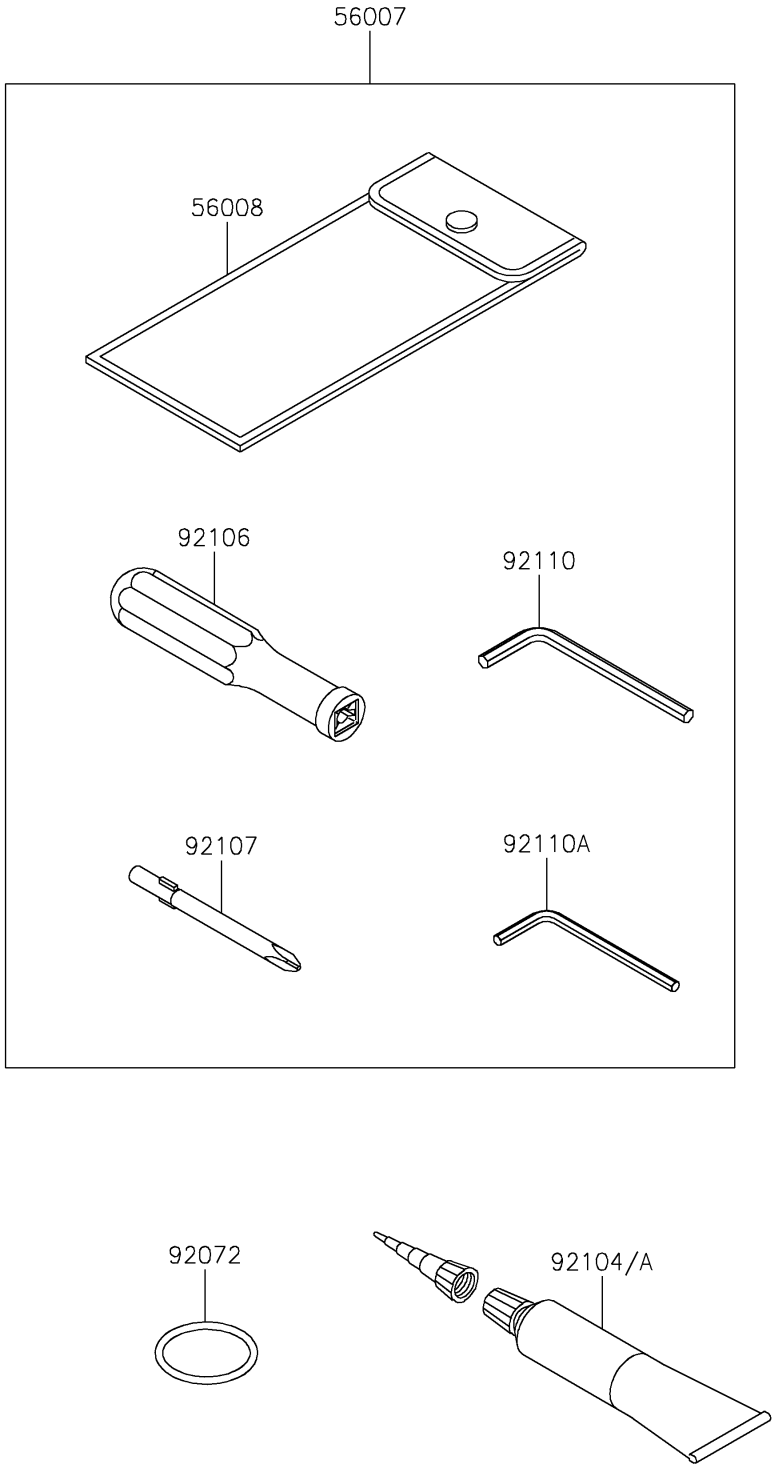

© 2026 Kawasaki Motors Corp., U.S.A.

2027 Ninja ZX-4RR KRT Edition ABS

Kawasaki
Let the Good Times Roll®

PARTS LIST

Owner's Tools

ITEM NAME	PART NUMBER	QUANTITY
TOOL-KIT (Ref # 56007)	56007-0168	1
BAG,TOOL (Ref # 56008)	56008-0036	1
BAND (Ref # 92072)	92072-0874	1
GASKET-LIQUID,TB1211F,CLEAR (Ref # 92104)	92104-0004	1
GASKET-LIQUID,TB1216B,BLACK (Ref # 92104A)	92104-1064	1
GRIP-SCREW DRIVER (Ref # 92106)	92106-0004	1
TOOL-DRIVER,#2PHILLIPS (Ref # 92107)	92107-0020	1
TOOL-WRENCH,ALLEN,5MM (Ref # 92110)	92110-0566	1
TOOL-WRENCH,ALLEN,4MM (Ref # 92110A)	92110-0567	1

© 2026 Kawasaki Motors Corp., U.S.A.