2026 Ninja ZX-4RR KRT Edition ABS

Kawasaki
Let the Good Times Roll®

PARTS DIAGRAM

Taillight(s)

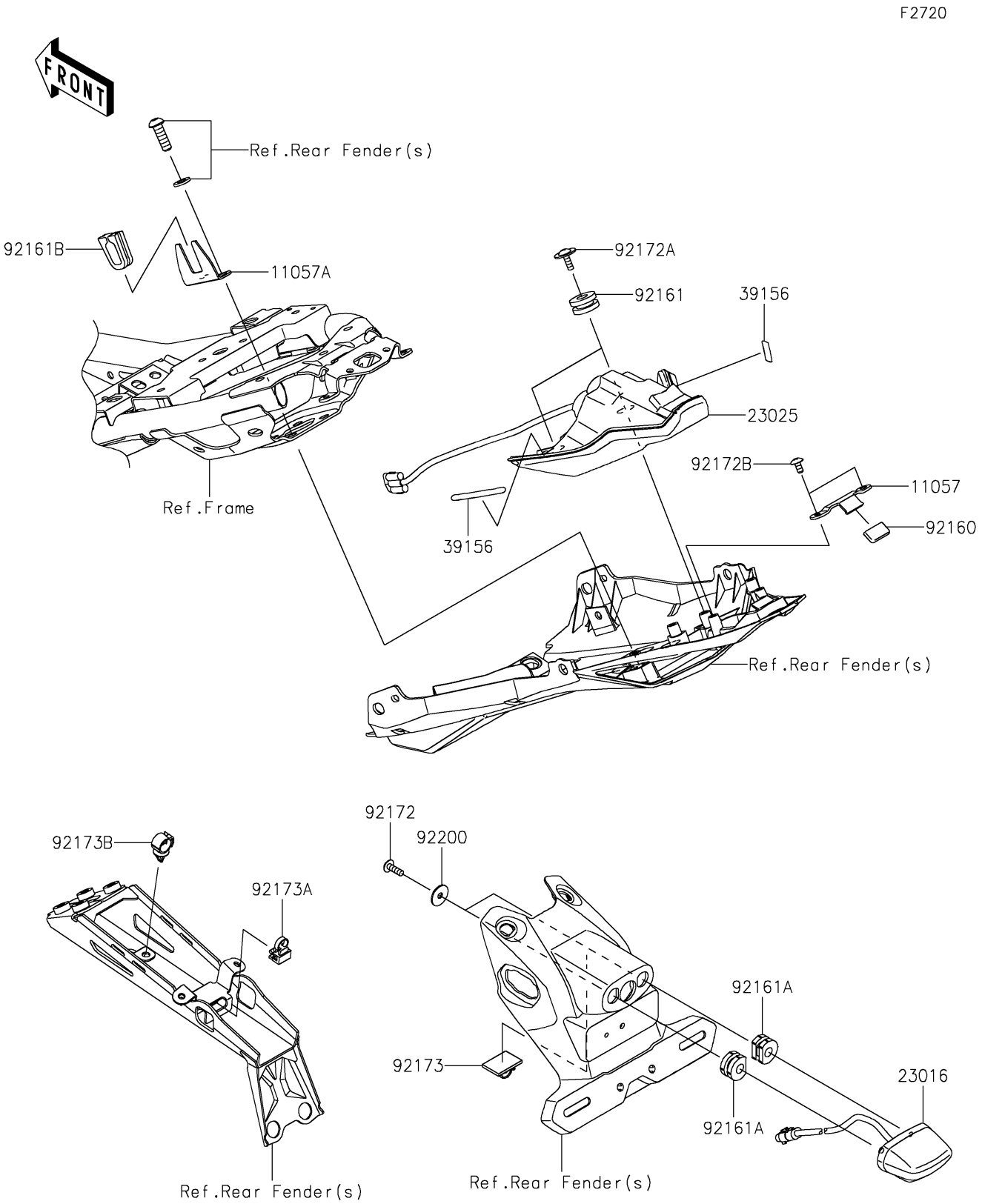

© 2026 Kawasaki Motors Corp., U.S.A.

2026 Ninja ZX-4RR KRT Edition ABS

Kawasaki
Let the Good Times Roll®

PARTS LIST

Taillight(s)

ITEM NAME	PART NUMBER	QUANTITY
BRACKET (Ref # 11057)	11057-1214	1
BRACKET (Ref # 11057A)	11057-7802	1
LAMP-ASSY,LICENSE,LED (Ref # 23016)	23016-0637	1
LAMP-TAIL,LED (Ref # 23025)	23025-0400	1
PAD,6X50 (Ref # 39156)	39156-2421	2
DAMPER (Ref # 92160)	92160-1190	1
DAMPER (Ref # 92161)	92161-0163	2
DAMPER (Ref # 92161A)	92161-0776	2
DAMPER,RR FENDER (Ref # 92161B)	92161-1984	1
SCREW,TAPPING,5X16 (Ref # 92172)	92172-0427	2
SCREW,5X16 (Ref # 92172A)	92172-1215	2
SCREW,CROS,5X10 (Ref # 92172B)	92172-1255	2
CLAMP (Ref # 92173)	92173-1061	1
CLAMP (Ref # 92173A)	92173-1578	1
CLAMP (Ref # 92173B)	92173-1951	1
WASHER,5.5X20X1.2 (Ref # 92200)	92200-0585	2

© 2026 Kawasaki Motors Corp., U.S.A.