2027 Ninja ZX-4RR KRT Edition ABS

Kawasaki
Let the Good Times Roll®

PARTS DIAGRAM

Headlight(s)

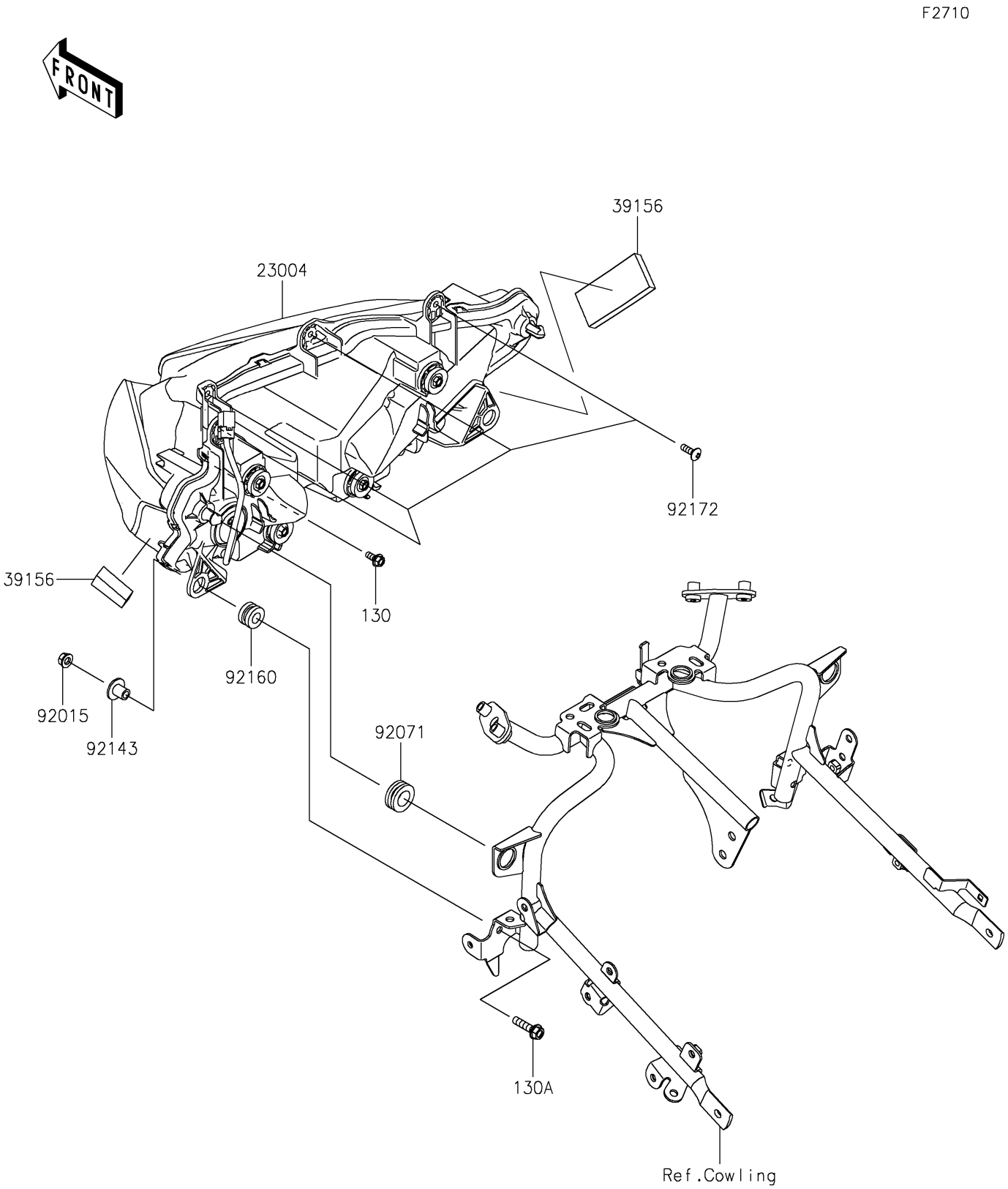

© 2026 Kawasaki Motors Corp., U.S.A.

2027 Ninja ZX-4RR KRT Edition ABS

Kawasaki
Let the Good Times Roll®

PARTS LIST

Headlight(s)

ITEM NAME	PART NUMBER	QUANTITY
LAMP-HEAD,LED (Ref # 23004)	23004-0423	1
PAD,70X40X10 (Ref # 39156)	39156-2804	2
NUT,FLANGED,6MM (Ref # 92015)	92015-1367	2
GROMMET (Ref # 92071)	92071-1131	2
COLLAR (Ref # 92143)	92143-1353	2
DAMPER,10X20X12 (Ref # 92160)	92160-1167	2
SCREW,TAPPING,5X16 (Ref # 92172)	92172-0427	4
BOLT-FLANGED,5X12 (Ref # 130)	130BA0512	1
BOLT-FLANGED,6X25 (Ref # 130A)	130BA0625	2

© 2026 Kawasaki Motors Corp., U.S.A.