2026 Ninja ZX-4RR KRT Edition ABS

Kawasaki
Let the Good Times Roll®

PARTS DIAGRAM

Stand(s)

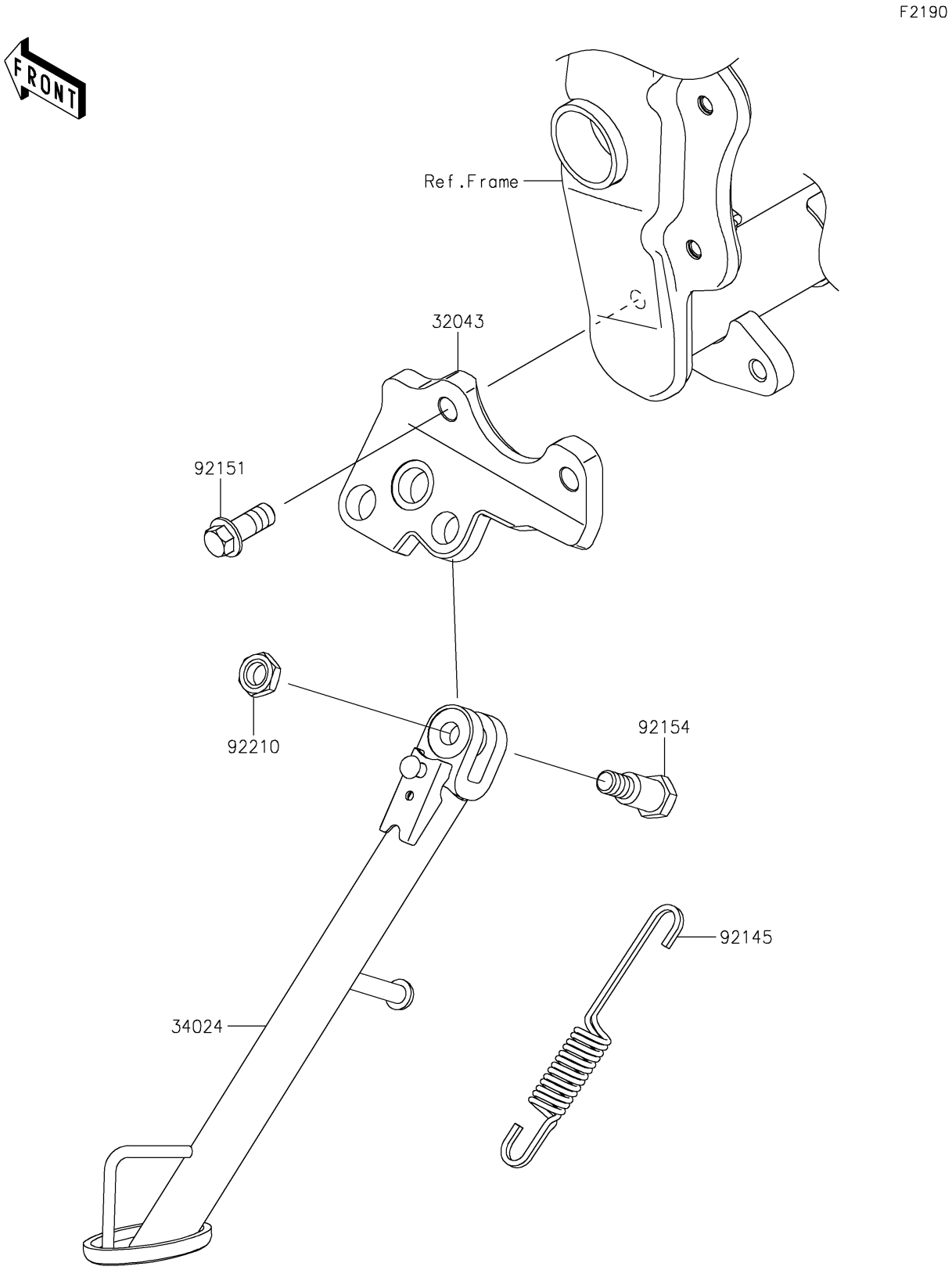

© 2026 Kawasaki Motors Corp., U.S.A.

2026 Ninja ZX-4RR KRT Edition ABS

Kawasaki
Let the Good Times Roll®

PARTS LIST

Stand(s)

ITEM NAME	PART NUMBER	QUANTITY
BRACKET-STAND (Ref # 32043)	32043-0668	1
STAND-SIDE (Ref # 34024)	34024-0138	1
SPRING,SIDE STAND (Ref # 92145)	92145-0804	1
BOLT,FLANGED,10X25 (Ref # 92151)	92151-1802	2
BOLT,10X35.5 (Ref # 92154)	92154-1023	1
NUT,LOCK,10MM (Ref # 92210)	92210-0784	1

© 2026 Kawasaki Motors Corp., U.S.A.