2027 Ninja ZX-4RR KRT Edition ABS

Kawasaki
Let the Good Times Roll®

PARTS DIAGRAM

Oil Pump/Oil Filter

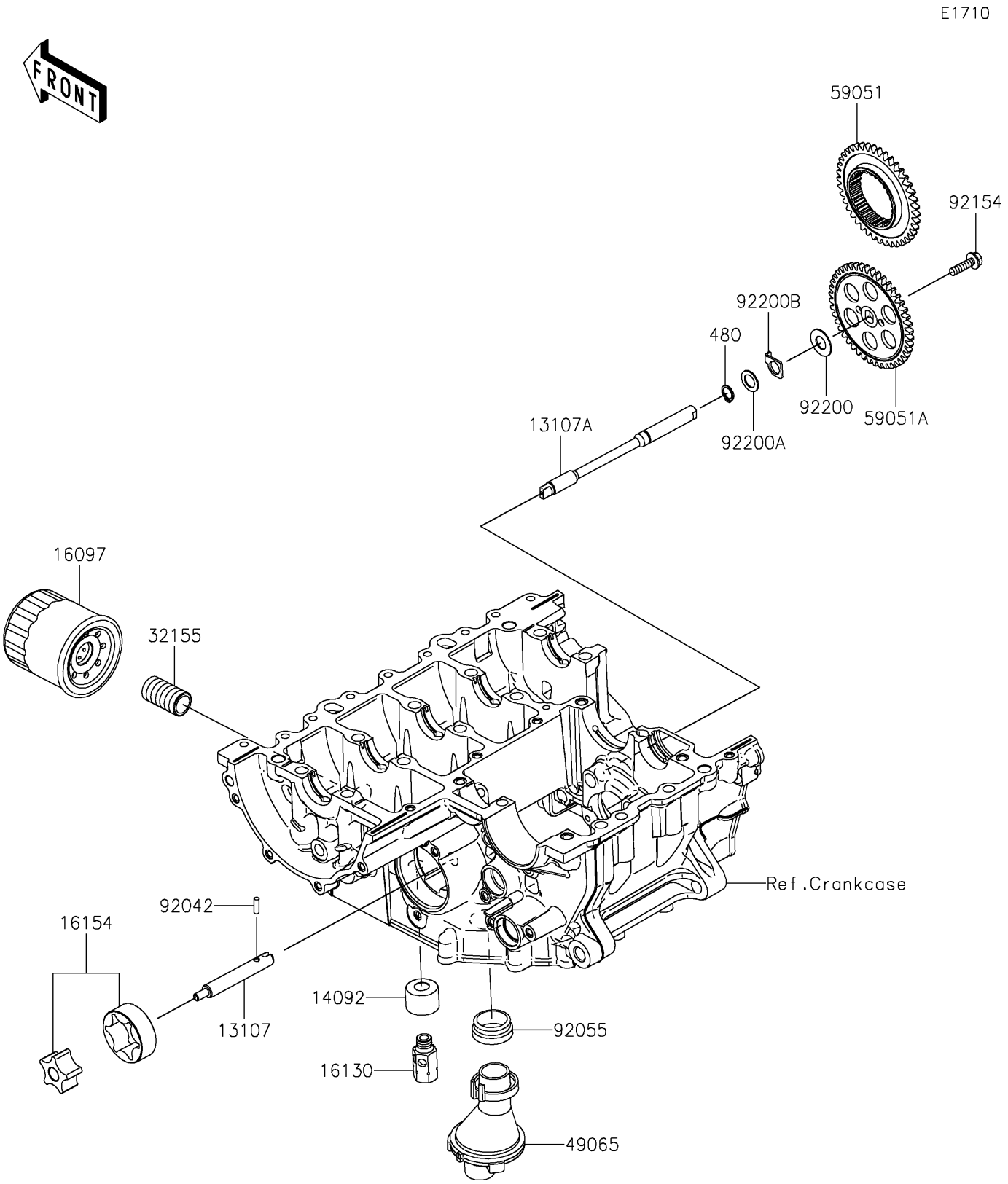

© 2026 Kawasaki Motors Corp., U.S.A.

2027 Ninja ZX-4RR KRT Edition ABS

Kawasaki
Let the Good Times Roll®

PARTS LIST

Oil Pump/Oil Filter

ITEM NAME	PART NUMBER	QUANTITY
SHAFT,OIL PUMP,LH (Ref # 13107)	13107-0903	1
SHAFT,OIL PUMP,RH (Ref # 13107A)	13107-0920	1
COVER,RELIEF VALVE (Ref # 14092)	14092-1002	1
FILTER-ASSY-OIL (Ref # 16097)	16097-0552	1
VALVE-ASSY-RELIEF (Ref # 16130)	16130-0006	1
ROTOR-PUMP (Ref # 16154)	16154-0753	1
PIPE,OIL FILTER (Ref # 32155)	32155-0029	1
FILTER-OIL (Ref # 49065)	49065-0715	1
GEAR-SPUR,41T (Ref # 59051)	59051-0873	1
GEAR-SPUR,44T (Ref # 59051A)	59051-0874	1
PIN,DOWEL,4X13.8 (Ref # 92042)	92042-030	1
RING-O,OIL FILTER (Ref # 92055)	92055-1503	1
BOLT,FLANGED,6X22 (Ref # 92154)	92154-1525	1
WASHER,11.3X23X1 (Ref # 92200)	92200-0719	1
WASHER (Ref # 92200A)	92200-1009	1
WASHER (Ref # 92200B)	92200-2558	1
CIRCLIP-TYPE-C,11MM (Ref # 480)	480J1100	1

© 2026 Kawasaki Motors Corp., U.S.A.