# 2026 Ninja ZX-4RR KRT Edition ABS

Kawasaki
Let the Good Times Roll®

## PARTS DIAGRAM

### Oil Pan

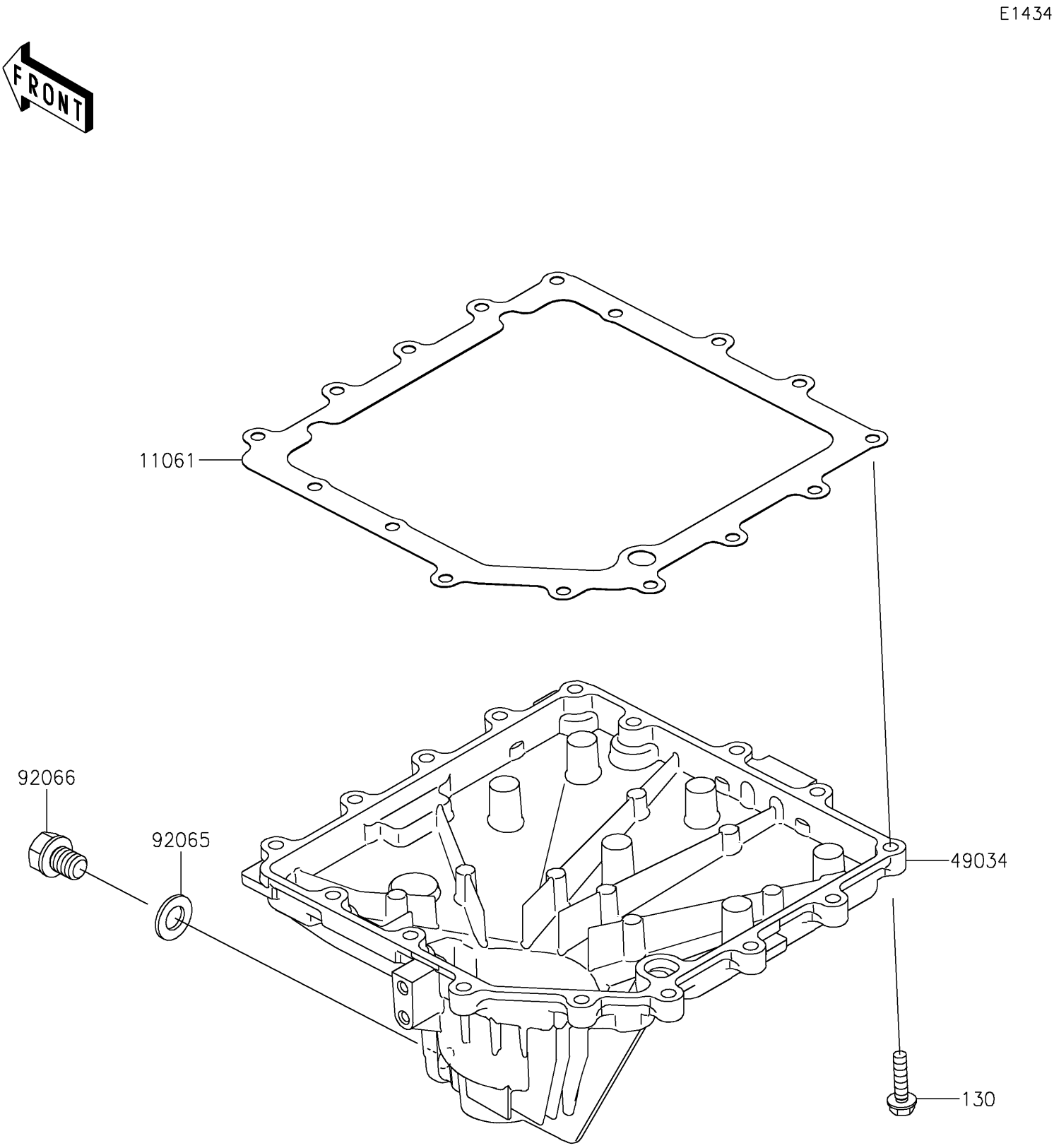


© 2026 Kawasaki Motors Corp., U.S.A.

# 2026 Ninja ZX-4RR KRT Edition ABS

Kawasaki
Let the Good Times Roll®

## PARTS LIST

### Oil Pan

| ITEM NAME | PART NUMBER | QUANTITY |
|---|---|---|
| GASKET,OIL PAN (Ref # 11061) | 11061-1328 | 1 |
| PAN-OIL (Ref # 49034) | 49034-0575 | 1 |
| GASKET,12X22X2 (Ref # 92065) | 92065-097 | 1 |
| PLUG,OIL DRAIN,12X15 (Ref # 92066) | 92066-1174 | 1 |
| BOLT-FLANGED,6X25 (Ref # 130) | 130BA0625 | 16 |

© 2026 Kawasaki Motors Corp., U.S.A.