2027 Ninja ZX-4RR KRT Edition ABS

Kawasaki
Let the Good Times Roll®

PARTS DIAGRAM

Valve(s)

E1210

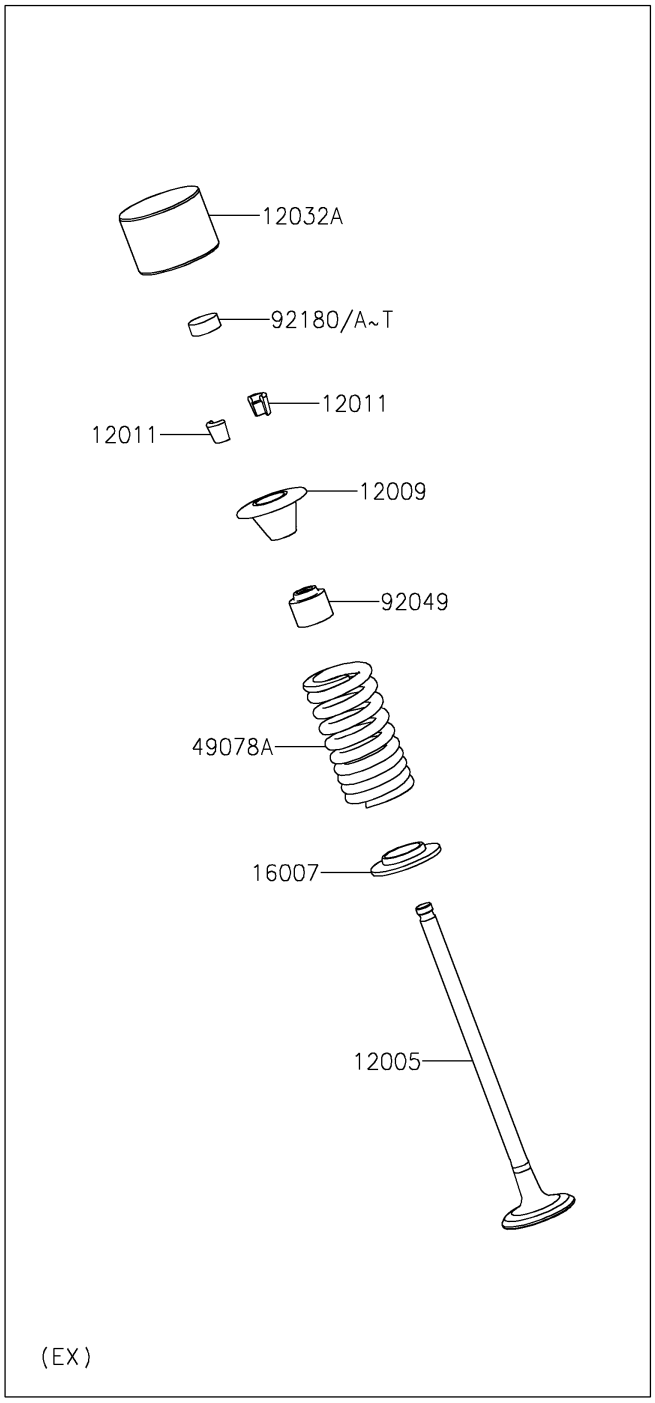

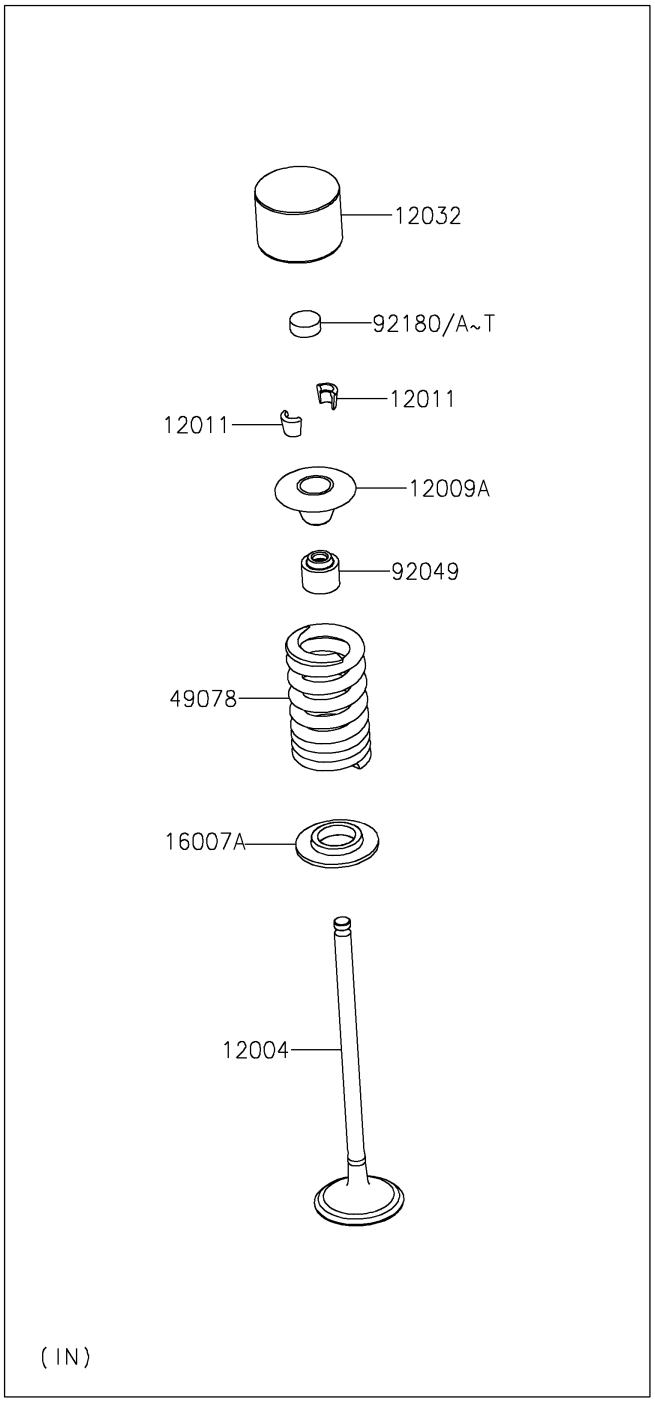

© 2026 Kawasaki Motors Corp., U.S.A.

2027 Ninja ZX-4RR KRT Edition ABS

Kawasaki
Let the Good Times Roll®

PARTS LIST

Valve(s)

ITEM NAME	PART NUMBER	QUANTITY
VALVE-INTAKE (Ref # 12004)	12004-0778	8
VALVE-EXHAUST (Ref # 12005)	12005-0802	8
RETAINER-VALVE SPRING (Ref # 12009)	12009-0048	8
RETAINER-VALVE SPRING (Ref # 12009A)	12009-0719	8
COLLET (Ref # 12011)	12011-1052	32
TAPPET,INTAKE (Ref # 12032)	12032-0037	8
TAPPET,EXHAUST (Ref # 12032A)	12032-0038	8
SEAT-SPRING (Ref # 16007)	16007-0762	8
SEAT-SPRING (Ref # 16007A)	16007-0782	8
SPRING-ENGINE VALVE,INTAKE (Ref # 49078)	49078-0800	8
SPRING-ENGINE VALVE,EXHAUST (Ref # 49078A)	49078-0801	8
SEAL-OIL,VALVE GUIDE (Ref # 92049)	92049-1308	16
SHIM,T=2.50 (Ref # 92180)	92180-1014	16
SHIM,T=2.55 (Ref # 92180A)	92180-1016	AR
SHIM,T=2.60 (Ref # 92180B)	92180-1018	AR
SHIM,T=2.65 (Ref # 92180C)	92180-1020	AR
SHIM,T=2.70 (Ref # 92180D)	92180-1022	AR
SHIM,T=2.75 (Ref # 92180E)	92180-1024	AR
SHIM,T=2.80 (Ref # 92180F)	92180-1026	AR
SHIM,T=2.85 (Ref # 92180G)	92180-1028	AR
SHIM,T=2.90 (Ref # 92180H)	92180-1030	AR
SHIM,T=2.95 (Ref # 92180I)	92180-1032	AR
SHIM,T=3.00 (Ref # 92180J)	92180-1034	AR
SHIM,T=3.05 (Ref # 92180K)	92180-1036	AR
SHIM,T=3.10 (Ref # 92180L)	92180-1038	AR
SHIM,T=3.15 (Ref # 92180M)	92180-1040	AR
SHIM,T=3.20 (Ref # 92180N)	92180-1042	AR
SHIM,T=3.25 (Ref # 92180O)	92180-1044	AR
SHIM,T=3.30 (Ref # 92180P)	92180-1046	AR

© 2026 Kawasaki Motors Corp., U.S.A.

2027 Ninja ZX-4RR KRT Edition ABS

Kawasaki
Let the Good Times Roll®

PARTS LIST

Valve(s)

ITEM NAME	PART NUMBER	QUANTITY
SHIM,T=3.35 (Ref # 92180Q)	92180-1048	AR
SHIM,T=3.40 (Ref # 92180R)	92180-1050	AR
SHIM,T=3.45 (Ref # 92180S)	92180-1052	AR
SHIM,T=3.50 (Ref # 92180T)	92180-1054	AR

© 2026 Kawasaki Motors Corp., U.S.A.