2026 Ninja ZX-4RR KRT Edition ABS

Kawasaki
Let the Good Times Roll®

PARTS DIAGRAM

Cylinder/Piston(s)

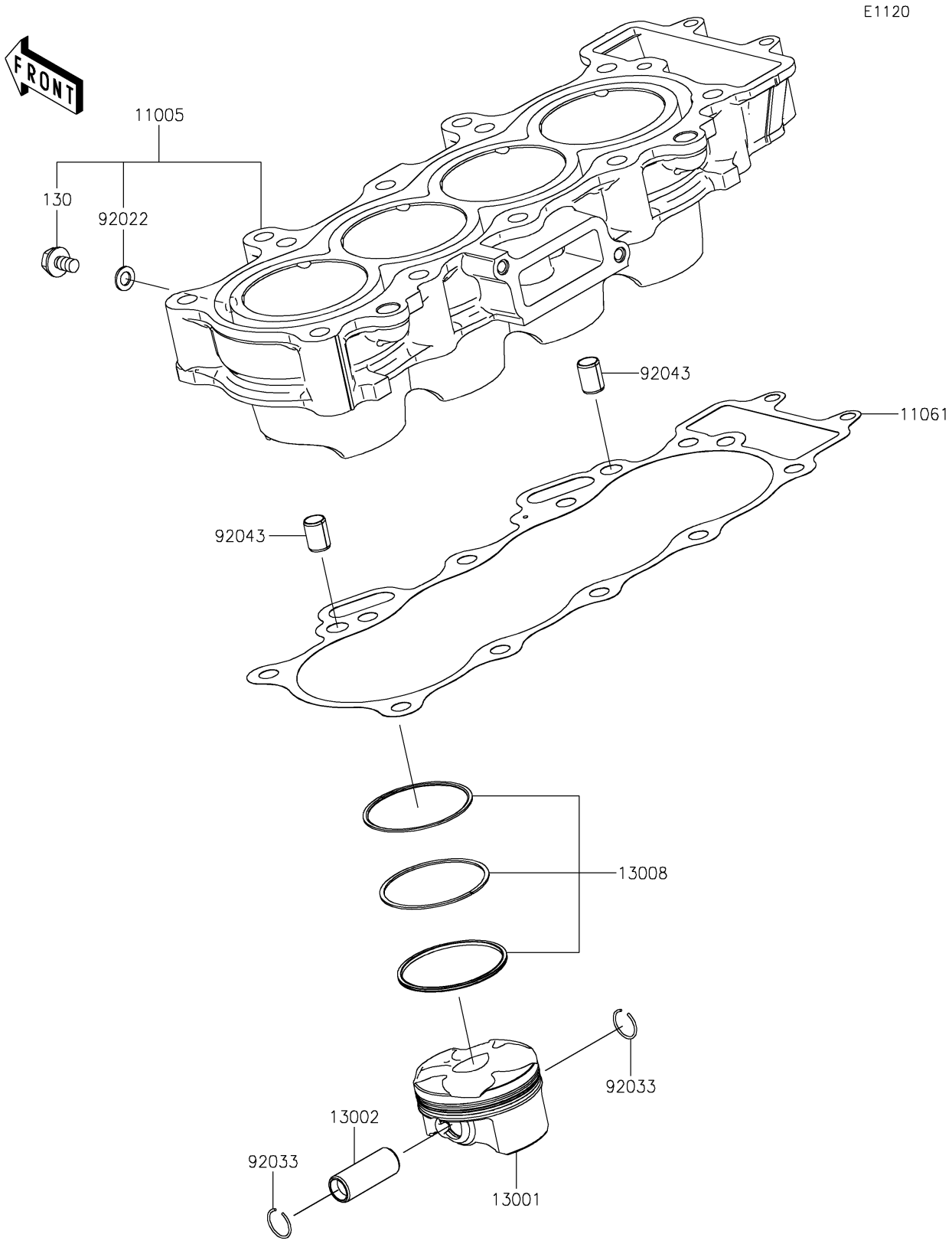

© 2026 Kawasaki Motors Corp., U.S.A.

2026 Ninja ZX-4RR KRT Edition ABS

Kawasaki
Let the Good Times Roll®

PARTS LIST

Cylinder/Piston(s)

ITEM NAME	PART NUMBER	QUANTITY
CYLINDER-ENGINE (Ref # 11005)	11005-0732	1
GASKET,CYLINDER BASE (Ref # 11061)	11061-1551	1
PISTON-ENGINE (Ref # 13001)	13001-0864	4
PIN-PISTON (Ref # 13002)	13002-0732	4
RING-SET-PISTON (Ref # 13008)	13008-0605	4
WASHER,6.2X11X1 (Ref # 92022)	92022-304	1
RING-SNAP (Ref # 92033)	92033-1287	8
PIN,8.2X10X14 (Ref # 92043)	92043-1264	2
BOLT-FLANGED,6X10 (Ref # 130)	130BA0610	1

© 2026 Kawasaki Motors Corp., U.S.A.