2027 KLX230R S

PARTS DIAGRAM

Ignition System

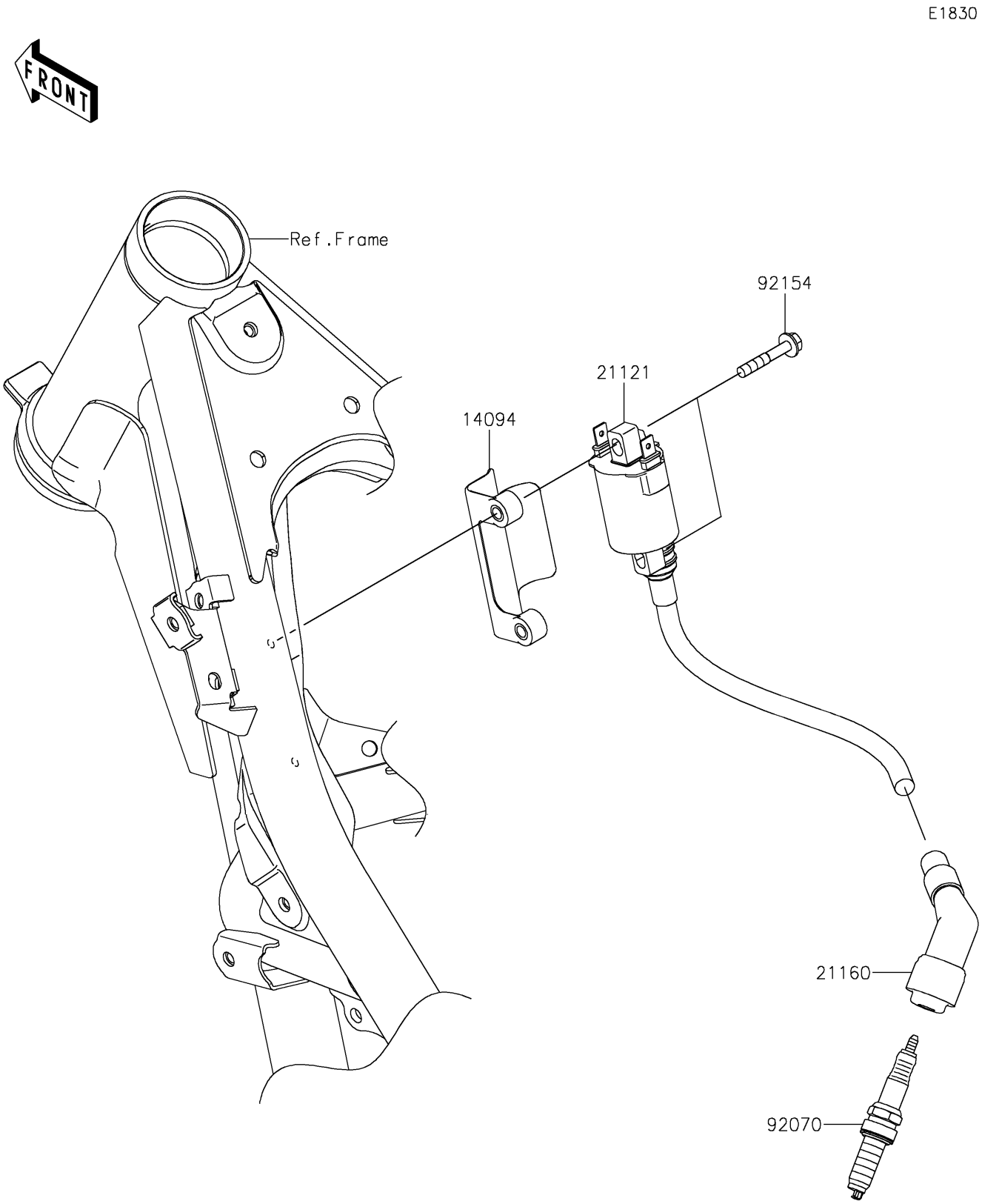

© 2026 Kawasaki Motors Corp., U.S.A.

2027 KLX230R S

PARTS LIST

Ignition System

ITEM NAME	PART NUMBER	QUANTITY
COVER (Ref # 14094)	14094-0012	1
COIL-IGNITION (Ref # 21121)	21121-0753	1
CAP-ASSY-PLUG (Ref # 21160)	21160-0026	1
PLUG-SPARK,SILMAR9B9(NGK) (Ref # 92070)	92070-0047	1
BOLT,FLANGED,5X30 (Ref # 92154)	92154-7467	2

© 2026 Kawasaki Motors Corp., U.S.A.