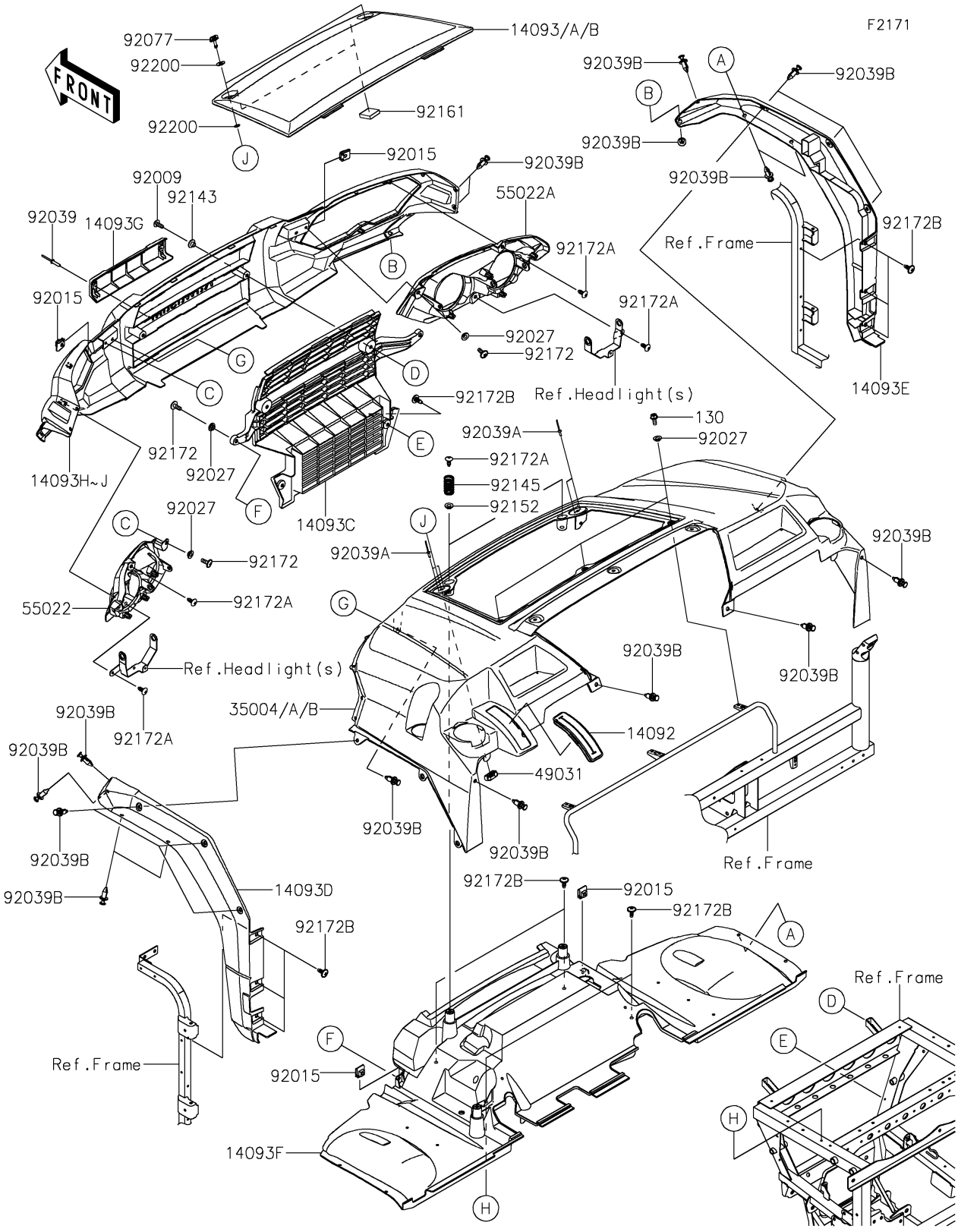
2026 MULE PRO-FXT™ 1000 LE RANCH EDITION

Kawasaki
Let the Good Times Roll®

PARTS DIAGRAM

Front Fender(s)


F2171
FRONT
92077
92200
92200
92161
14093/A/B
92015
92039B
92009
92143
92039
14093G
55022A
92172A
92015
92027
92172
92172A
92172B
Ref.Headlight(s)
130
92027
92039A
92172A
92145
92152
14093H~J
92172
92027
14093C
92027
92172
55022
92172A
Ref.Headlight(s)
92172A
92039B
35004/A/B
14092
49031
92039B
92039B
92039B
92039B
92039B
92039B
92039B
14093D
92172B
Ref.Frame
92039B
92039B
92039B
92039B
92039B
92039B
92039B

2026 MULE PRO-FXT™ 1000 LE RANCH EDITION

Kawasaki
Let the Good Times Roll®

PARTS LIST

Front Fender(s)

ITEM NAME	PART NUMBER	QUANTITY
COVER,CENTER CONSOLE,TOP (Ref # 14092)	14092-0791	1
COVER,OPEN,M.P.SILVER (Ref # 14093B)	14093-0019-IS	1
COVER,RADIATOR (Ref # 14093C)	14093-0584	1
COVER,SIDE,LH (Ref # 14093D)	14093-0596	1
COVER,SIDE,RH (Ref # 14093E)	14093-0597	1
COVER,TOP,FR INNER (Ref # 14093F)	14093-1405	1
COVER,FR GRILLE,LOGO (Ref # 14093G)	14093-1434	1
COVER,FR GRILLE,M.P.SILVER (Ref # 14093J)	14093-1435-IS	1
FENDER-FRONT,M.P.SILVER (Ref # 35004B)	35004-0337-IS	1
LATCH (Ref # 49031)	49031-0008	2
COVER-HEAD LAMP,LH (Ref # 55022)	55022-0322	1
COVER-HEAD LAMP,RH (Ref # 55022A)	55022-0323	1
SCREW,TAPPING,6X16 (Ref # 92009)	92009-1166	2
NUT,CLAMP,6MM (Ref # 92015)	92015-1678	4
COLLAR,L=4.6 (Ref # 92027)	92027-1168	7
RIVET,4.0X17.5 (Ref # 92039)	92039-0703	2
RIVET,3.2X9.5 (Ref # 92039A)	92039-0785	4
RIVET (Ref # 92039B)	92039-0865	24
KNOB (Ref # 92077)	92077-0030	2
COLLAR (Ref # 92143)	92143-1057	2
SPRING,17X65 (Ref # 92145)	92145-1727	2
COLLAR (Ref # 92152)	92152-0140	2
DAMPER,40X40X10 (Ref # 92161)	92161-1861	2
SCREW,6X16 (Ref # 92172)	92172-0236	4
SCREW,6X16 (Ref # 92172A)	92172-0284	6
SCREW,6X16 (Ref # 92172B)	92172-0826	12
WASHER (Ref # 92200)	92200-0503	4
BOLT-FLANGED,6X14 (Ref # 130)	130BA0614	3

© 2026 Kawasaki Motors Corp., U.S.A.