2027 MULE PRO-FXT™ 1000 LE RANCH EDITION

Kawasaki
Let the Good Times Roll®

PARTS DIAGRAM

Drive Converter

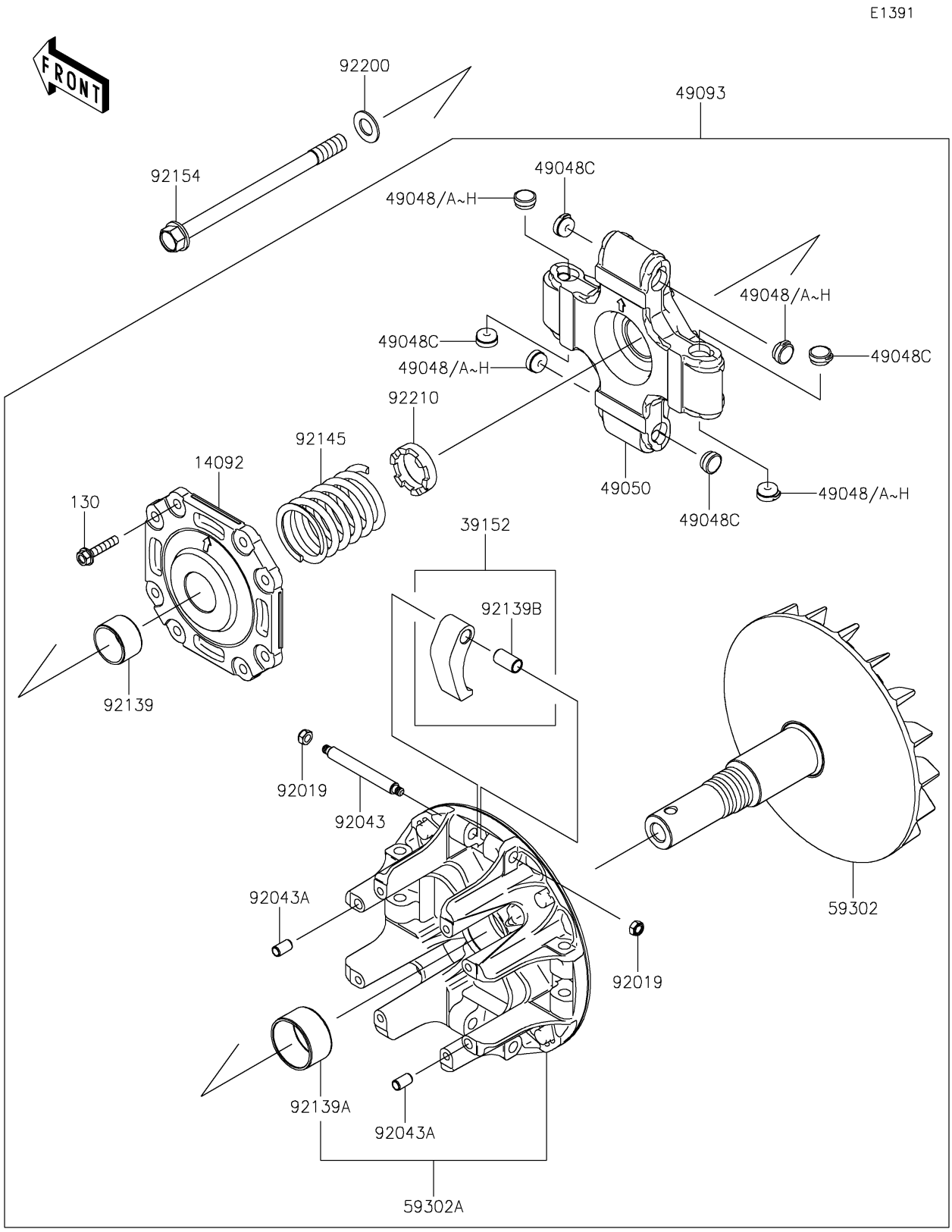

© 2026 Kawasaki Motors Corp., U.S.A.

2027 MULE PRO-FXT™ 1000 LE RANCH EDITION

Kawasaki
Let the Good Times Roll®

PARTS LIST

Drive Converter

ITEM NAME	PART NUMBER	QUANTITY
COVER (Ref # 14092)	14092-1201	1
WEIGHT-RAMP (Ref # 39152)	39152-0107	4
SHOE,T=7.2 (Ref # 49048)	49048-1087	AR
SHOE,T=7.3 (Ref # 49048A)	49048-1088	AR
SHOE,T=7.4 (Ref # 49048B)	49048-1089	AR
SHOE,T=7.5 (Ref # 49048C)	49048-1090	8
SHOE,T=7.6 (Ref # 49048D)	49048-1091	AR
SHOE,T=7.7 (Ref # 49048E)	49048-1092	AR
SHOE,T=7.8 (Ref # 49048F)	49048-1093	AR
SHOE,T=7.9 (Ref # 49048G)	49048-1094	AR
SHOE,T=8.0 (Ref # 49048H)	49048-1095	AR
SPIDER (Ref # 49050)	49050-0567	1
CONVERTER-ASSY-DRIVE (Ref # 49093)	49093-0114	1
SHEAVE-COMP (Ref # 59302)	59302-0113	1
SHEAVE-COMP,MOVABLE (Ref # 59302A)	59302-0119	1
NUT,LOCK,6MM (Ref # 92019)	92019-008	8
PIN (Ref # 92043)	92043-0809	4
PIN,6.2X8X14 (Ref # 92043A)	92043-1263	2
BUSHING (Ref # 92139)	92139-1243	1
BUSHING (Ref # 92139A)	92139-1244	1
BUSHING,9X11X19.75 (Ref # 92139B)	92139-1245	4
SPRING (Ref # 92145)	92145-2271	1
BOLT-FLANGED,12X171 (Ref # 92154)	92154-4491	1
WASHER,13.4X25X1.6 (Ref # 92200)	92200-0477	1
NUT,LOCK (Ref # 92210)	92210-1922	1
BOLT-FLANGED,6X30 (Ref # 130)	130CA0630	8

© 2026 Kawasaki Motors Corp., U.S.A.