2027 MULE PRO-FXT 1000 LE Ranch Edition

Kawasaki
Let the Good Times Roll®

PARTS DIAGRAM

Muffler(s)

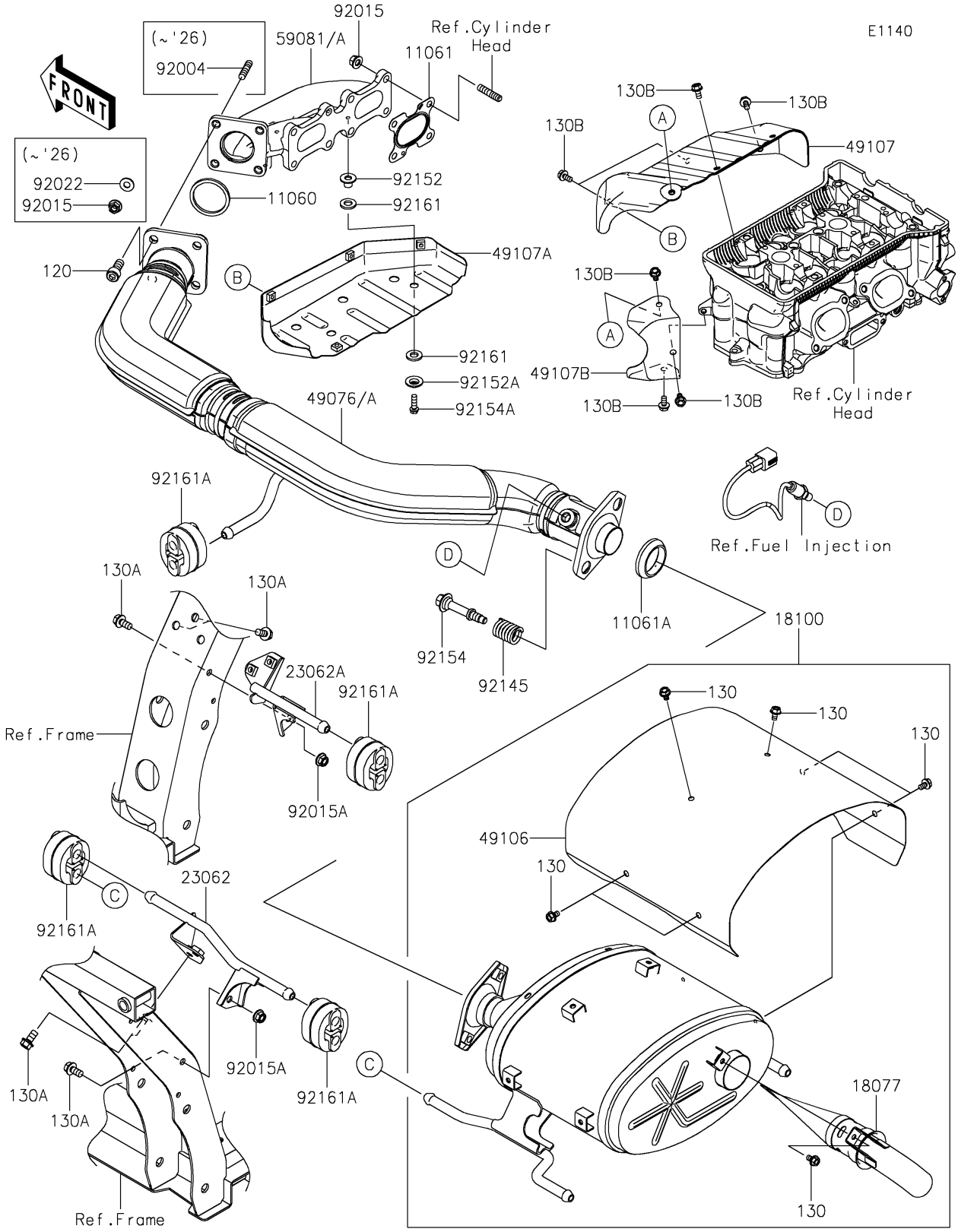

© 2026 Kawasaki Motors Corp., U.S.A.

2027 MULE PRO-FXT 1000 LE Ranch Edition

Kawasaki
Let the Good Times Roll®

PARTS LIST

Muffler(s)

ITEM NAME	PART NUMBER	QUANTITY
GASKET,EXHAUST PIPE (Ref # 11060)	11060-1680	1
GASKET,CYL.HEAD-EXHAUST PIPE (Ref # 11061)	11061-1310	2
GASKET,MUFFLER (Ref # 11061A)	11061-1445	1
ARRESTER-SPARK (Ref # 18077)	18077-0714	1
BODY-ASSY-MUFFLER (Ref # 18100)	18100-0619	1
BRACKET-COMP,LEFT (Ref # 23062)	23062-1410	1
BRACKET-COMP,RIGHT (Ref # 23062A)	23062-1411	1
PIPE-ASSY-EXHAUST (Ref # 49076)	49076-0002	1
PIPE-ASSY-EXHAUST (Ref # 49076A)	49076-0003	1
COVER-MUFFLER (Ref # 49106)	49106-0878	1
COVER-EXHAUST PIPE,UPPER (Ref # 49107)	49107-0852	1
COVER-EXHAUST PIPE,LOWER (Ref # 49107A)	49107-0853	1
COVER-EXHAUST PIPE,SIDE (Ref # 49107B)	49107-0854	1
MANIFOLD-EXHAUST (Ref # 59081)	59081-0471	1
MANIFOLD-EXHAUST (Ref # 59081A)	59081-0556	1
STUD,8X25 (Ref # 92004)	92004-1214	4
NUT,8MM (Ref # 92015)	92015-1402	8
NUT,8MM (Ref # 92015A)	92015-1432	2
WASHER,8.2X18X1.5 (Ref # 92022)	92022-1964	4
SPRING (Ref # 92145)	92145-2262	2
COLLAR,6.8X10X11.6 (Ref # 92152)	92152-1699	5
COLLAR (Ref # 92152A)	92152-3797	5
BOLT,MUFFLER (Ref # 92154)	92154-4485	2
BOLT-FLANGED-SMALL,6X20 (Ref # 92154A)	92154-7254	5
DAMPER (Ref # 92161)	92161-0319	10
DAMPER (Ref # 92161A)	92161-2466	4
BOLT-SOCKET,10X25 (Ref # 120)	120CD1025	4
BOLT-FLANGED,6X10 (Ref # 130)	130BD0610	7
BOLT-FLANGED,8X16 (Ref # 130A)	130CA0816	6

© 2026 Kawasaki Motors Corp., U.S.A.

2027 MULE PRO-FXT 1000 LE Ranch Edition

PARTS LIST

Muffler(s)

ITEM NAME	PART NUMBER	QUANTITY
BOLT-FLANGED,6X12 (Ref # 130B)	130CD0612	8

© 2026 Kawasaki Motors Corp., U.S.A.