2027 KT1000 TRANS4x4

PARTS DIAGRAM

Drive Shaft-Rear

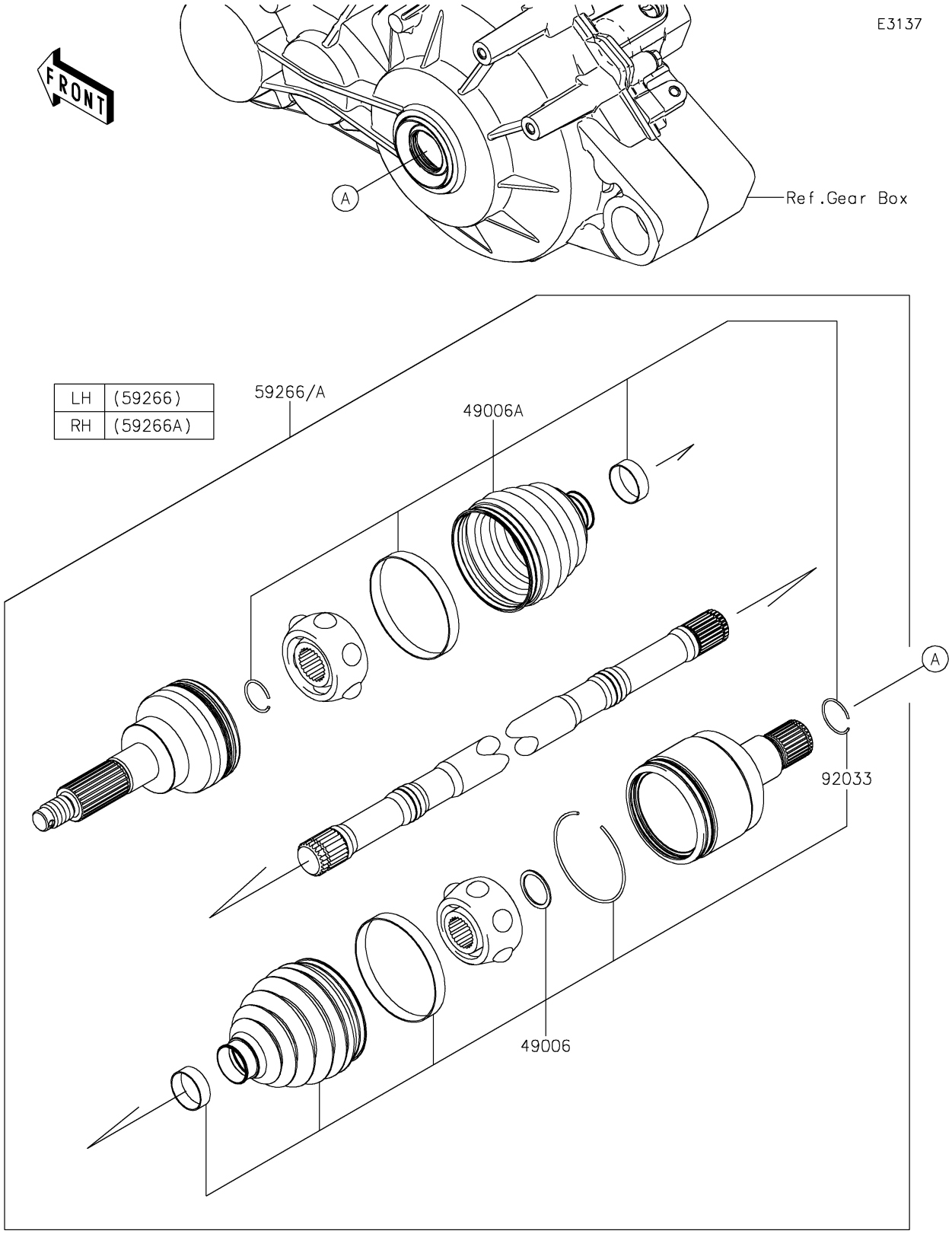

© 2026 Kawasaki Motors Corp., U.S.A.

2027 KT1000 TRANS4x4

PARTS LIST

Drive Shaft-Rear

ITEM NAME	PART NUMBER	QUANTITY

© 2026 Kawasaki Motors Corp., U.S.A.