2027 KT1000 TRANS4x4

PARTS DIAGRAM

Converter Cover

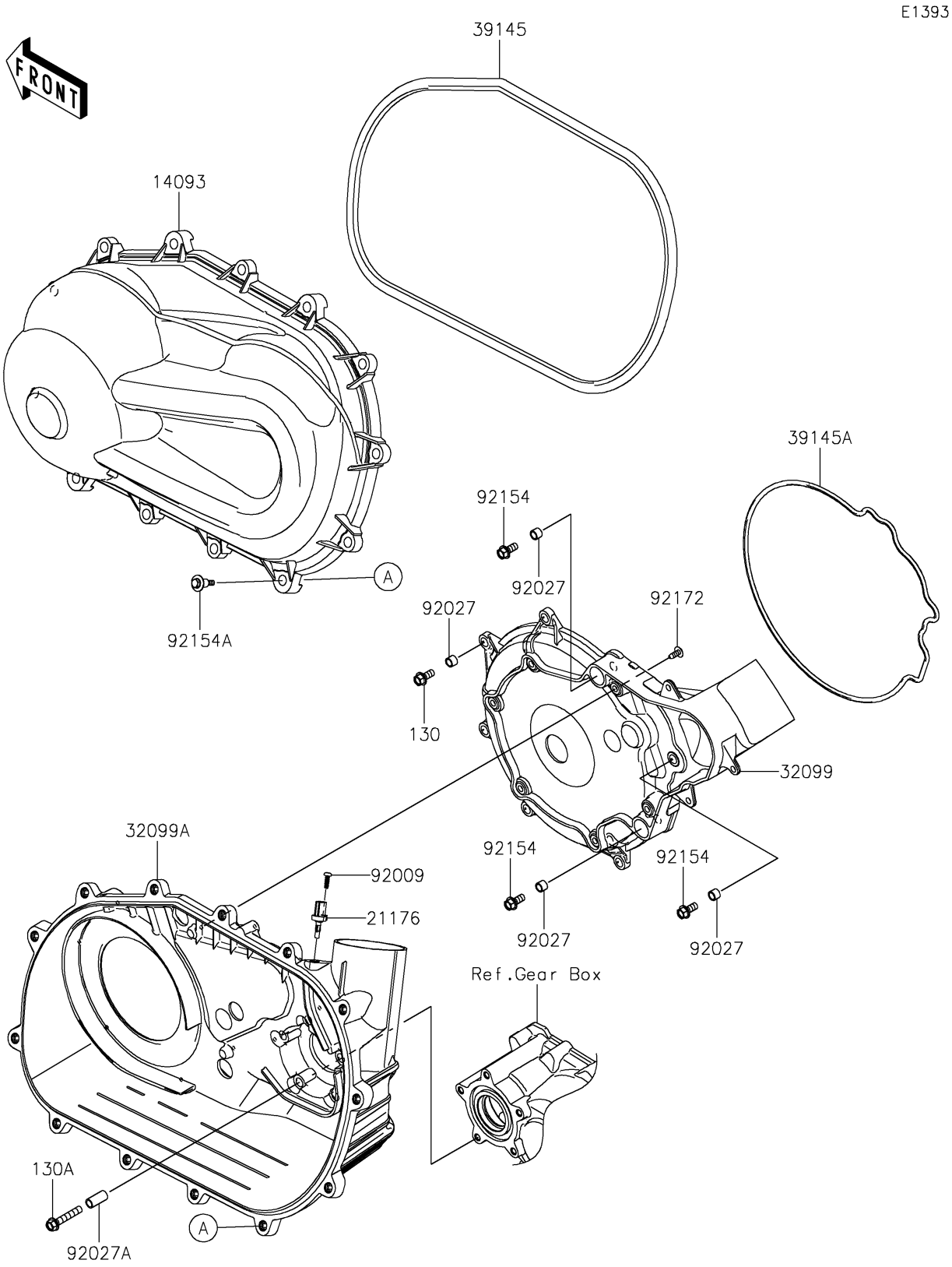

© 2026 Kawasaki Motors Corp., U.S.A.

2027 KT1000 TRANS4x4

PARTS LIST

Converter Cover

ITEM NAME	PART NUMBER	QUANTITY
COVER,CVT (Ref # 14093)	14093-1361	1
SENSOR,AIR TEMPERATURE (Ref # 21176)	21176-0048	1
CASE,INNER (Ref # 32099)	32099-0823	1
CASE,OUTER (Ref # 32099A)	32099-0841	1
TRIM-SEAL,CVT COVER (Ref # 39145)	39145-0742	1
TRIM-SEAL,E/G SIDE (Ref # 39145A)	39145-0771	1
SCREW,TAPPING,5X16 (Ref # 92009)	92009-1264	1
COLLAR,8.8X12X9 (Ref # 92027)	92027-1568	8
COLLAR (Ref # 92027A)	92027-4012	5
BOLT,FLANGED,8X18 (Ref # 92154)	92154-1386	3
BOLT,CVT COVER (Ref # 92154A)	92154-1522	13
SCREW,6X16 (Ref # 92172)	92172-0284	9
BOLT-FLANGED,8X18 (Ref # 130)	130BA0818	5
BOLT-FLANGED,8X45 (Ref # 130A)	130BA0845	5

© 2026 Kawasaki Motors Corp., U.S.A.