2026 TERYX® KRX4™ 1000

PARTS DIAGRAM

Taillight(s)

Kawasaki
Let the Good Times Roll®

F2720

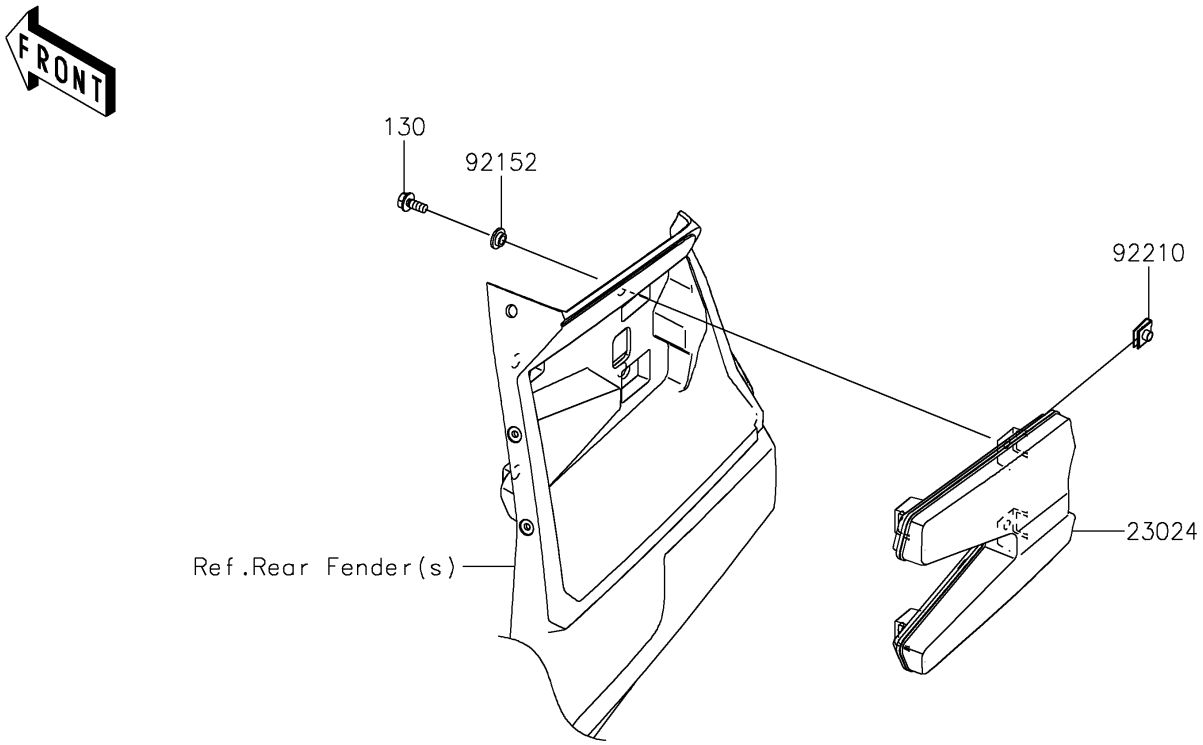

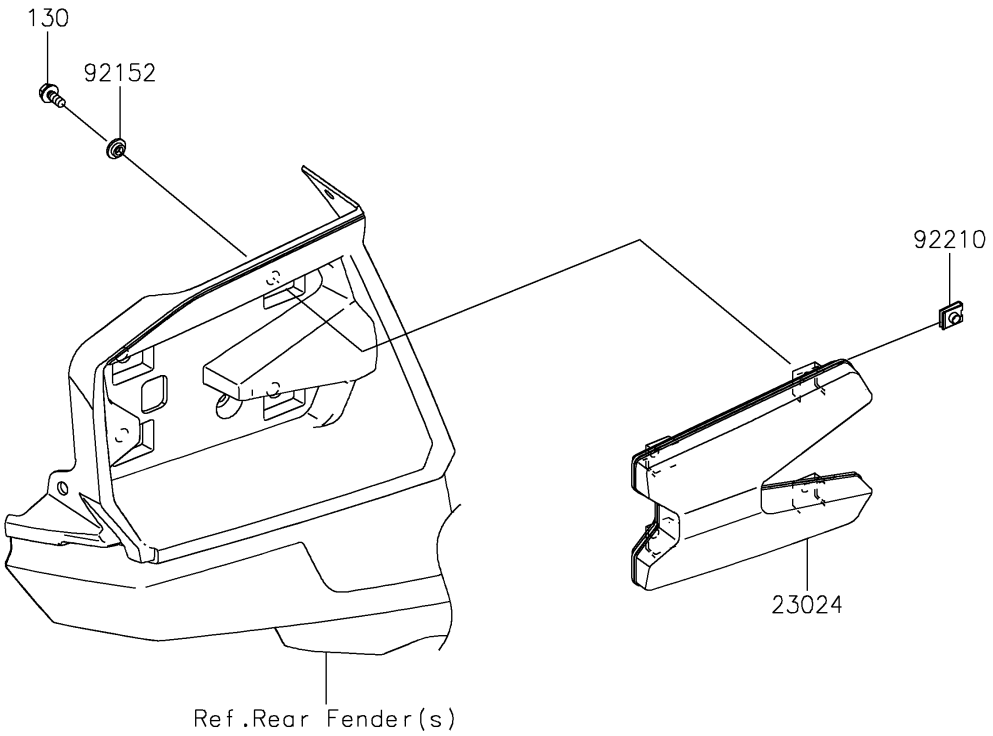

© 2026 Kawasaki Motors Corp., U.S.A.

2026 TERYX® KRX4™ 1000

PARTS LIST

Taillight(s)

ITEM NAME	PART NUMBER	QUANTITY
LAMP-ASSY-TAIL,LED (Ref # 23024)	23024-0015	2
COLLAR,6.3X9.5X4.1 (Ref # 92152)	92152-1571	8
NUT (Ref # 92210)	92210-1125	8
BOLT-FLANGED,6X14 (Ref # 130)	130BA0614	8

© 2026 Kawasaki Motors Corp., U.S.A.