2026 TERYX® KRX4™ 1000

PARTS DIAGRAM

Frame Fittings(Middle)

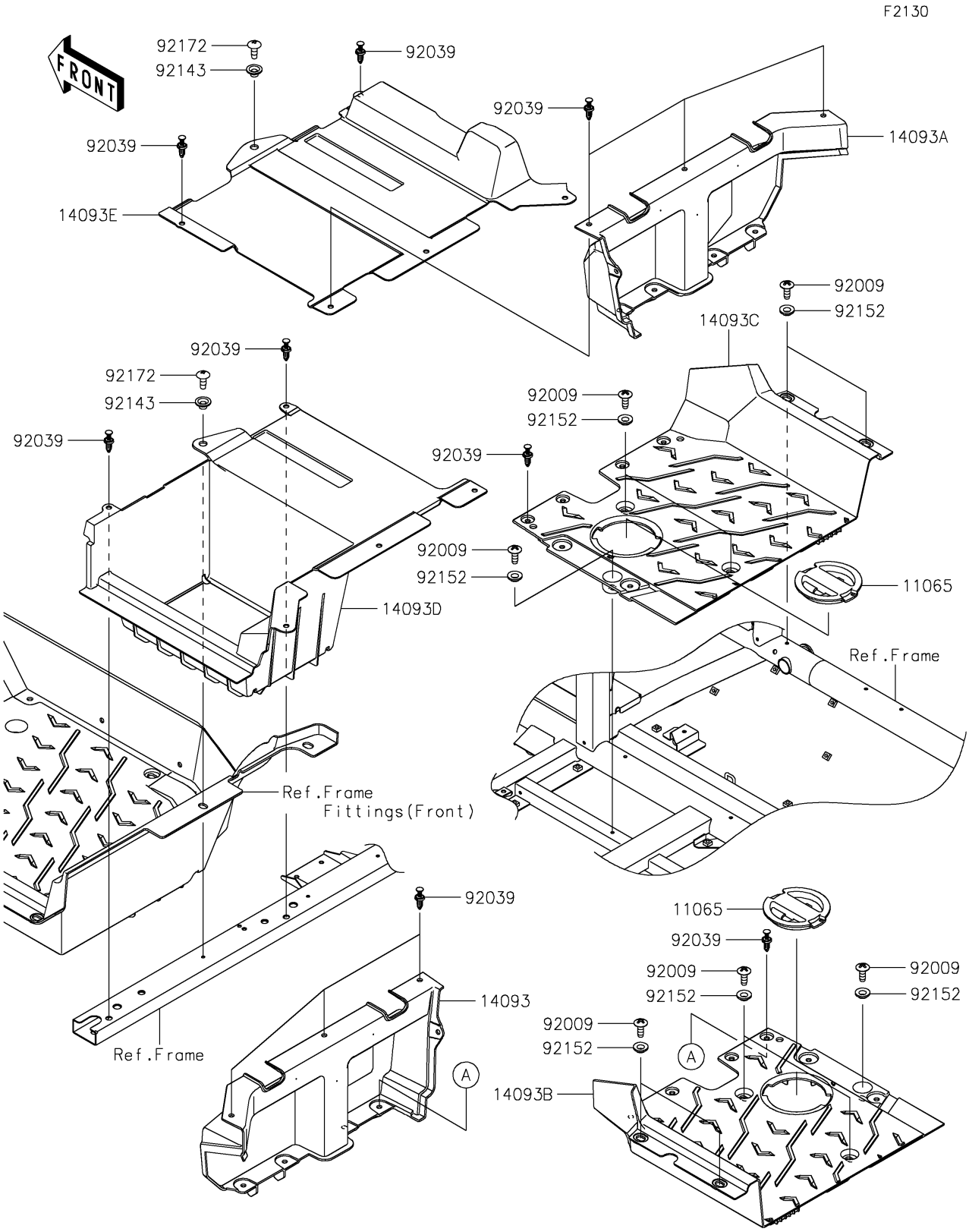

© 2026 Kawasaki Motors Corp., U.S.A.

2026 TERYX® KRX4™ 1000

PARTS LIST

Frame Fittings(Middle)

ITEM NAME	PART NUMBER	QUANTITY
CAP,FLOOR (Ref # 11065)	11065-1423	2
COVER,RR FLOOR,FR,LH (Ref # 14093)	14093-1227	1
COVER,RR FLOOR,FR,RH (Ref # 14093A)	14093-1228	1
COVER,RR FLOOR,RR,LH (Ref # 14093B)	14093-1229	1
COVER,RR FLOOR,RR,RH (Ref # 14093C)	14093-1230	1
COVER,FUEL TANK,LH (Ref # 14093D)	14093-1241	1
COVER,FUEL TANK,RH (Ref # 14093E)	14093-1242	1
SCREW,TAPPING,6X16 (Ref # 92009)	92009-1166	10
RIVET (Ref # 92039)	92039-0865	18
COLLAR (Ref # 92143)	92143-1057	2
COLLAR,6.3X9.5X4.1 (Ref # 92152)	92152-1571	10
SCREW,TAPPING,6X16 (Ref # 92172)	92172-0739	2

© 2026 Kawasaki Motors Corp., U.S.A.