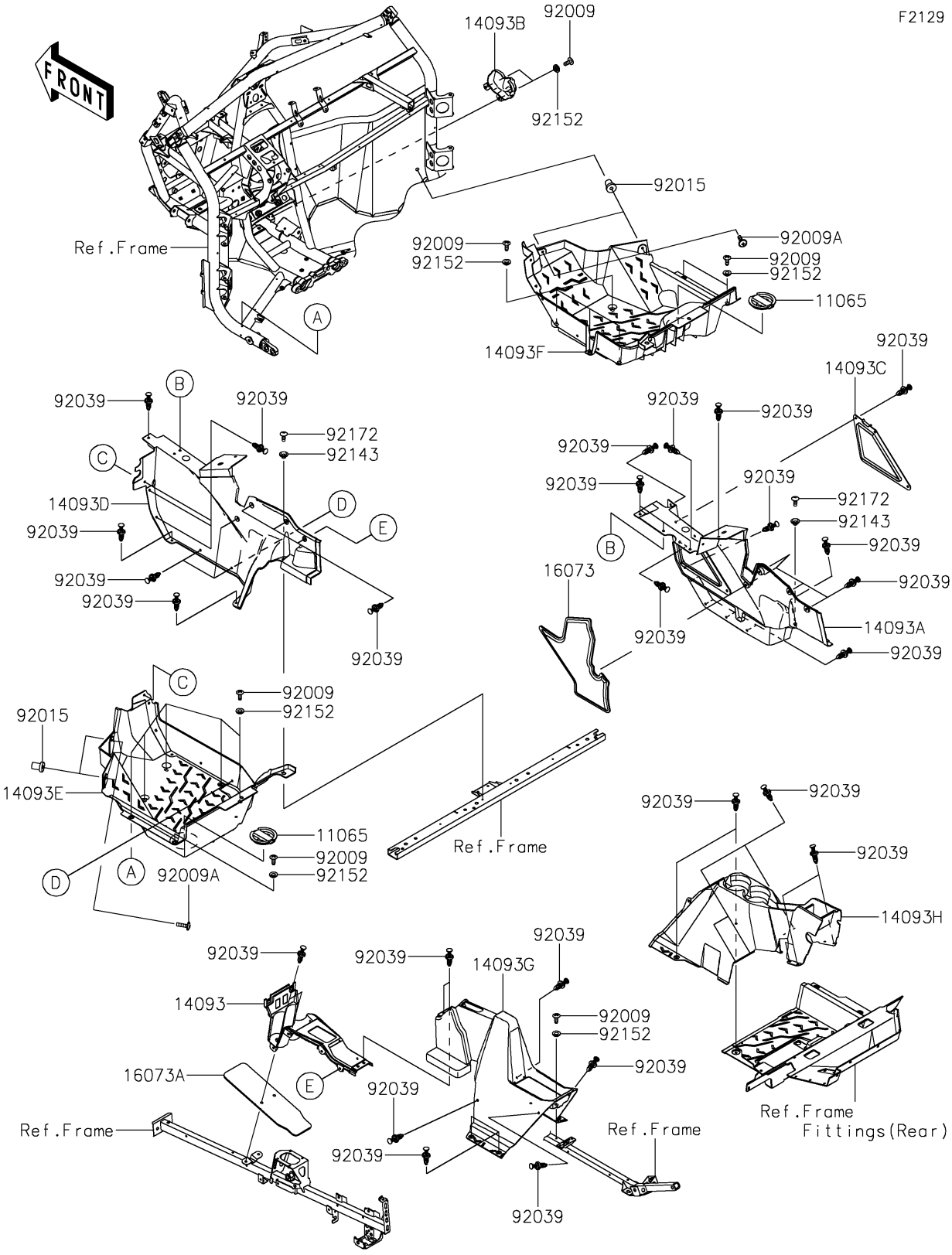
2026 TERYX® KRX4™ 1000

PARTS DIAGRAM

Frame Fittings(Front)


F2129
FRONT
14093B
92009
92152
92015
Ref.Frame
92009
92152
92009A
92009
92152
11065
14093F
92039
14093C
92039
92039
92039
92039
92039
92039
92172
92143
92039
92039
92039
92039
92039
92039

2026 TERYX® KRX4™ 1000

PARTS LIST

Frame Fittings(Front)

ITEM NAME	PART NUMBER	QUANTITY

© 2026 Kawasaki Motors Corp., U.S.A.