2027 TERYX® KRX4™ 1000

PARTS DIAGRAM

Steering Shaft

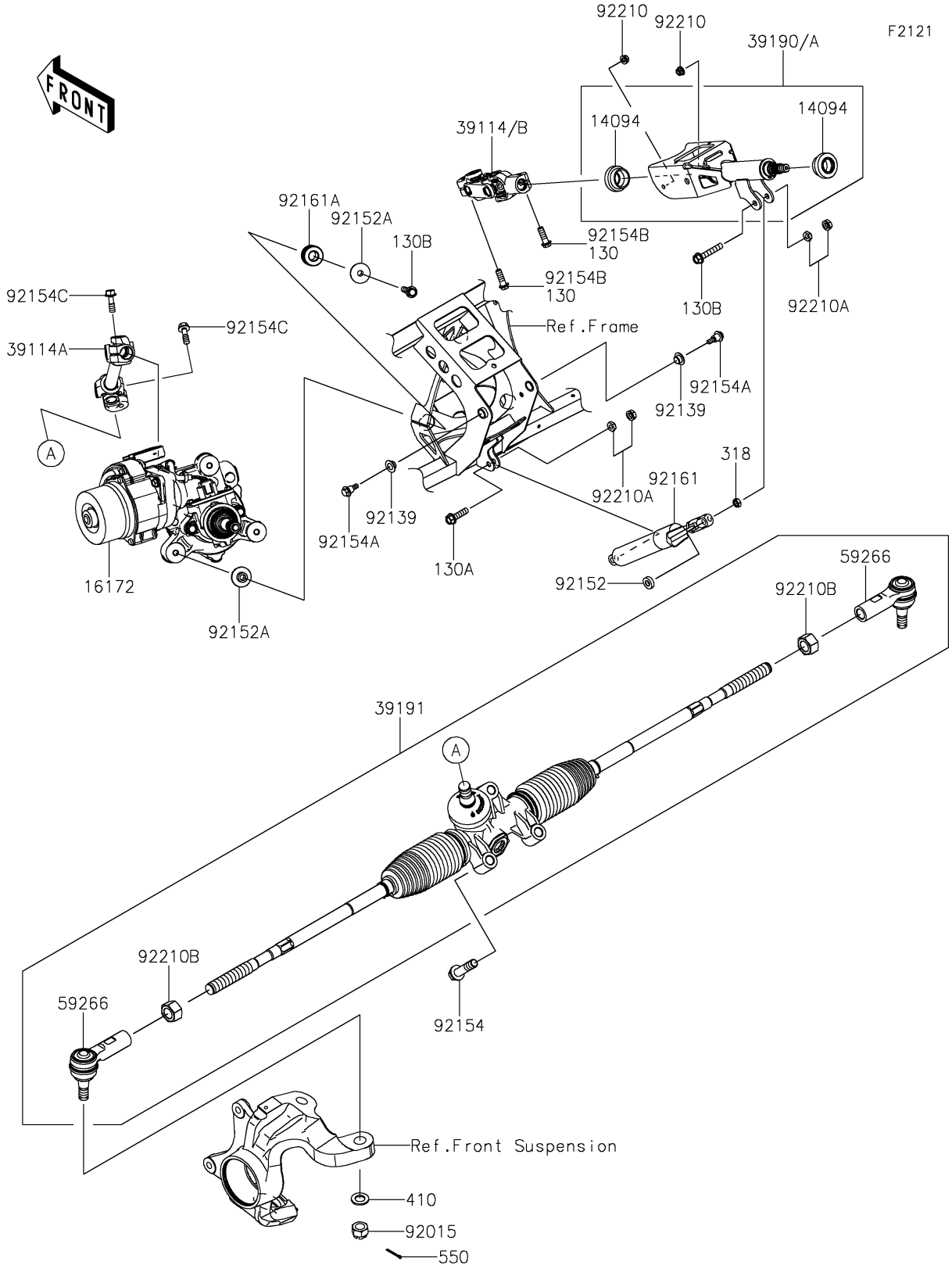

© 2026 Kawasaki Motors Corp., U.S.A.

2027 TERYX® KRX4™ 1000

PARTS LIST

Steering Shaft

ITEM NAME	PART NUMBER	QUANTITY
COVER,STEERING SHAFT (Ref # 14094)	14094-0322	2
ACTUATOR,EPS (Ref # 16172)	16172-0043	1
SHAFT-COMP-STRG,LWR (Ref # 39114A)	39114-0043	1
SHAFT-COMP-STRG,UPP (Ref # 39114B)	39114-0048	1
SHAFT-ASSY-STEERING (Ref # 39190A)	39190-0033	1
GEAR-ASSY-STEERING (Ref # 39191)	39191-0040	1
JOINT-BALL (Ref # 59266)	59266-0743	2
NUT,CASTLE,14MM (Ref # 92015)	92015-1841	2
BUSHING (Ref # 92139)	92139-0230	2
COLLAR,8.2X18X5 (Ref # 92152)	92152-1848	1
COLLAR,8.5X30X10.6 (Ref # 92152A)	92152-2149	6
BOLT,FLANGED,12X50 (Ref # 92154)	92154-1008	3
BOLT,6X21.5 (Ref # 92154A)	92154-1320	2
BOLT,FLANGED,8X39 (Ref # 92154C)	92154-7043	2
DAMPER,STEERING TILT (Ref # 92161)	92161-2186	1
DAMPER (Ref # 92161A)	92161-2187	3
NUT,LOCK,FLANGED,6MM (Ref # 92210)	92210-0303	2
NUT,HARD LOCK,8MM (Ref # 92210A)	92210-0934	2
NUT (Ref # 92210B)	92210-1903	2
BOLT-FLANGED,8X25 (Ref # 130)	130CA0825	2
BOLT-FLANGED,8X30 (Ref # 130A)	130CA0830	1
BOLT-FLANGED,8X45 (Ref # 130B)	130CA0845	4
NUT-HEX-SMALL,8MM (Ref # 318)	318BA0800	1
WASHER-PLAIN-SMALL,14MM (Ref # 410)	410AA1400	2
PIN-COTTER,3.0X25 (Ref # 550)	550AA3025	2

© 2026 Kawasaki Motors Corp., U.S.A.