2027 Teryx KRX4 1000

PARTS DIAGRAM

Frame

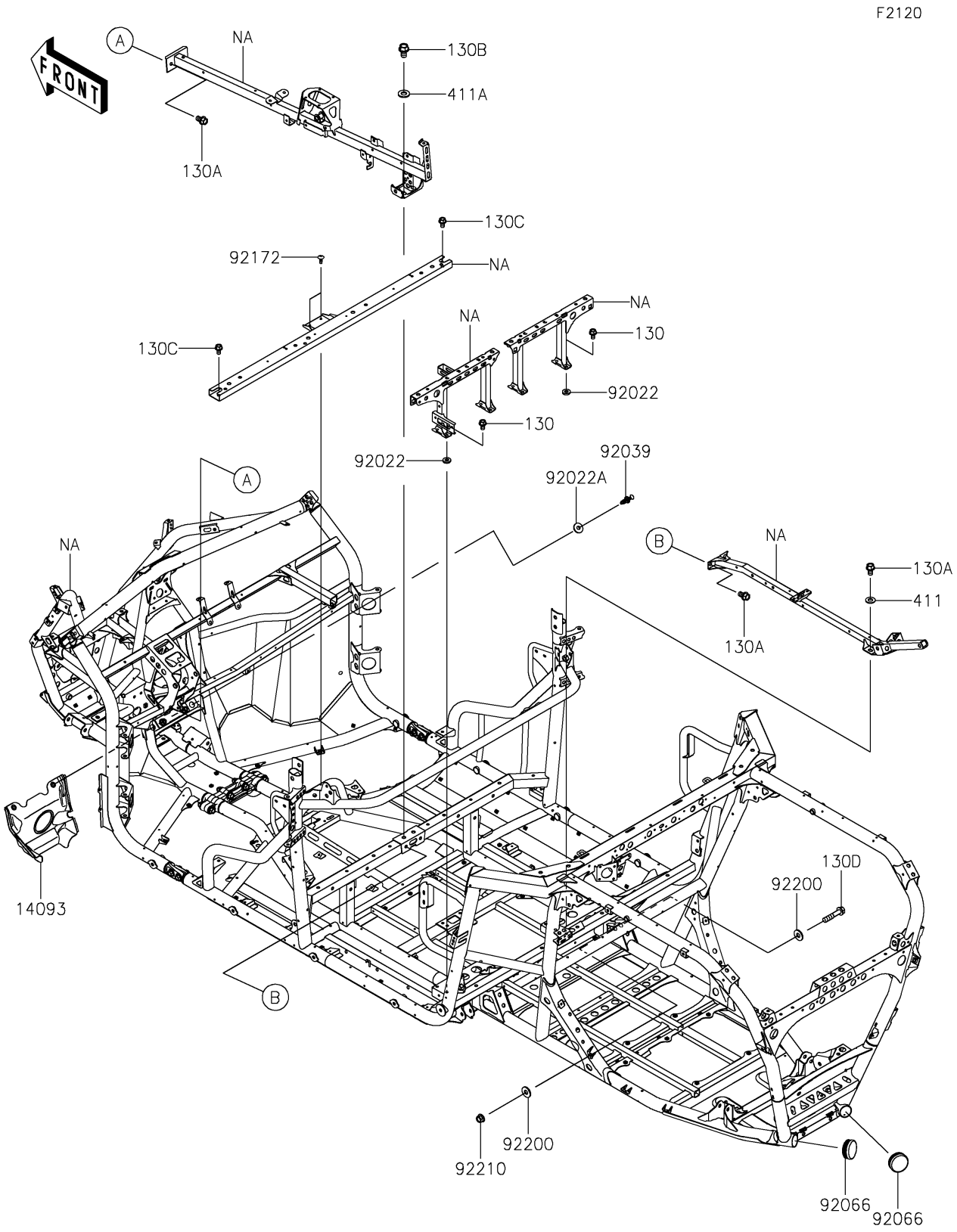

© 2026 Kawasaki Motors Corp., U.S.A.

2027 Teryx KRX4 1000

PARTS LIST

Frame

ITEM NAME	PART NUMBER	QUANTITY

© 2026 Kawasaki Motors Corp., U.S.A.