2027 TERYX® KRX4™ 1000

PARTS DIAGRAM

Fuel Injection

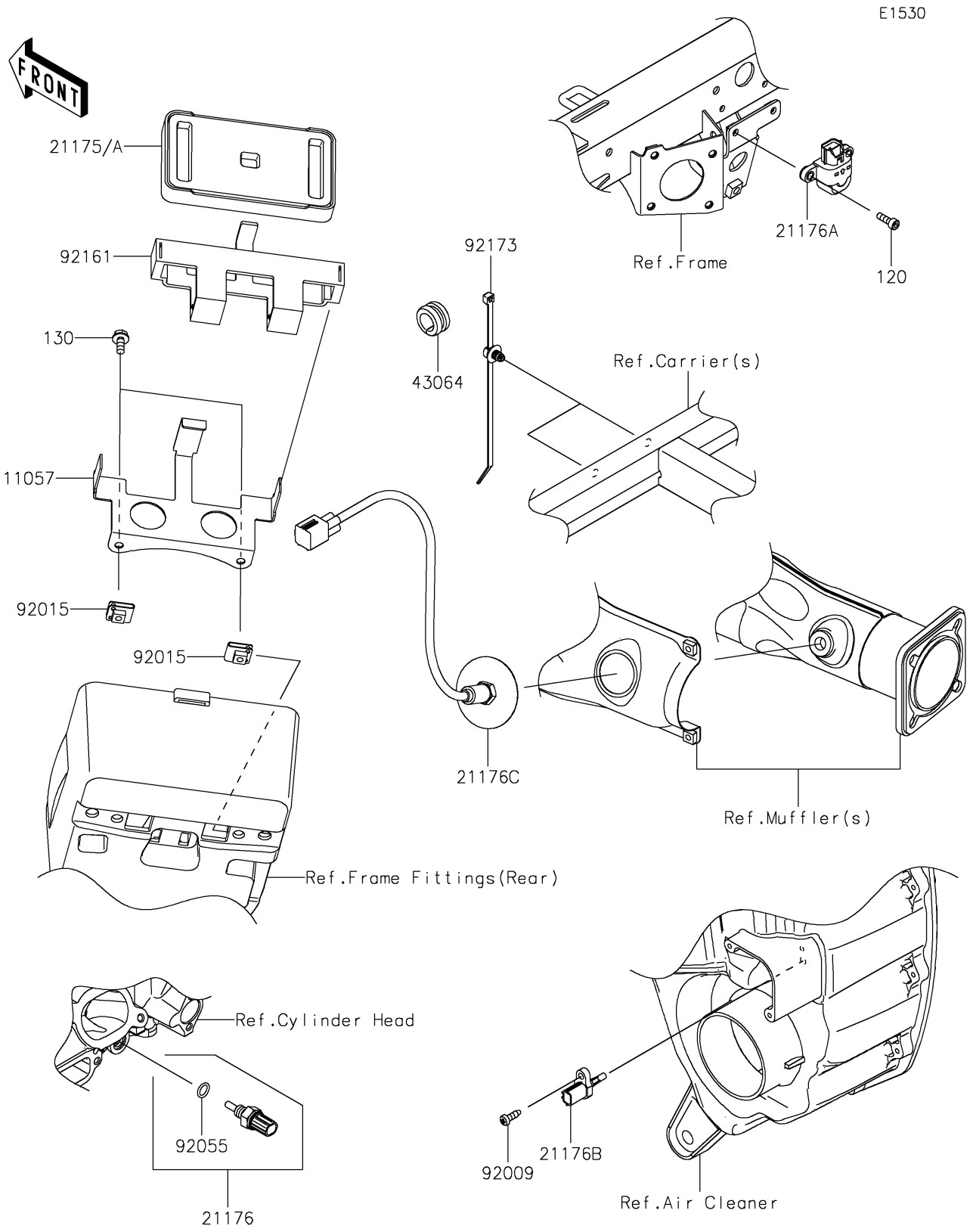

© 2026 Kawasaki Motors Corp., U.S.A.

2027 TERYX® KRX4™ 1000

PARTS LIST

Fuel Injection

ITEM NAME	PART NUMBER	QUANTITY
BRACKET,ECU (Ref # 11057)	11057-2230	1
CONTROL UNIT-ELECTRONIC (Ref # 21175)	21175-1957	1
CONTROL UNIT-ELECTRONIC (Ref # 21175A)	21175-1958	1
SENSOR,WATER TEMP (Ref # 21176)	21176-0009	1
SENSOR,VEHICLE-DOWN (Ref # 21176A)	21176-0026	1
SENSOR,AIR TEMPERATURE (Ref # 21176B)	21176-0048	1
SENSOR,OXYGEN (Ref # 21176C)	21176-1147	1
GROMMET,HOSE CLAMP (Ref # 43064)	43064-007	2
SCREW,TAPPING,5X16 (Ref # 92009)	92009-1984	1
NUT,CLAMP,6MM (Ref # 92015)	92015-1678	2
RING-O,9.5X1.9 (Ref # 92055)	92055-0016	1
DAMPER,ECU (Ref # 92161)	92161-2183	1
CLAMP (Ref # 92173)	92173-2188	2
BOLT-SOCKET,5X16 (Ref # 120)	120CA0516	2
BOLT-FLANGED,6X14 (Ref # 130)	130CA0614	2

© 2026 Kawasaki Motors Corp., U.S.A.