2026 Teryx KRX 1000

PARTS DIAGRAM

Guards/Cab Frame

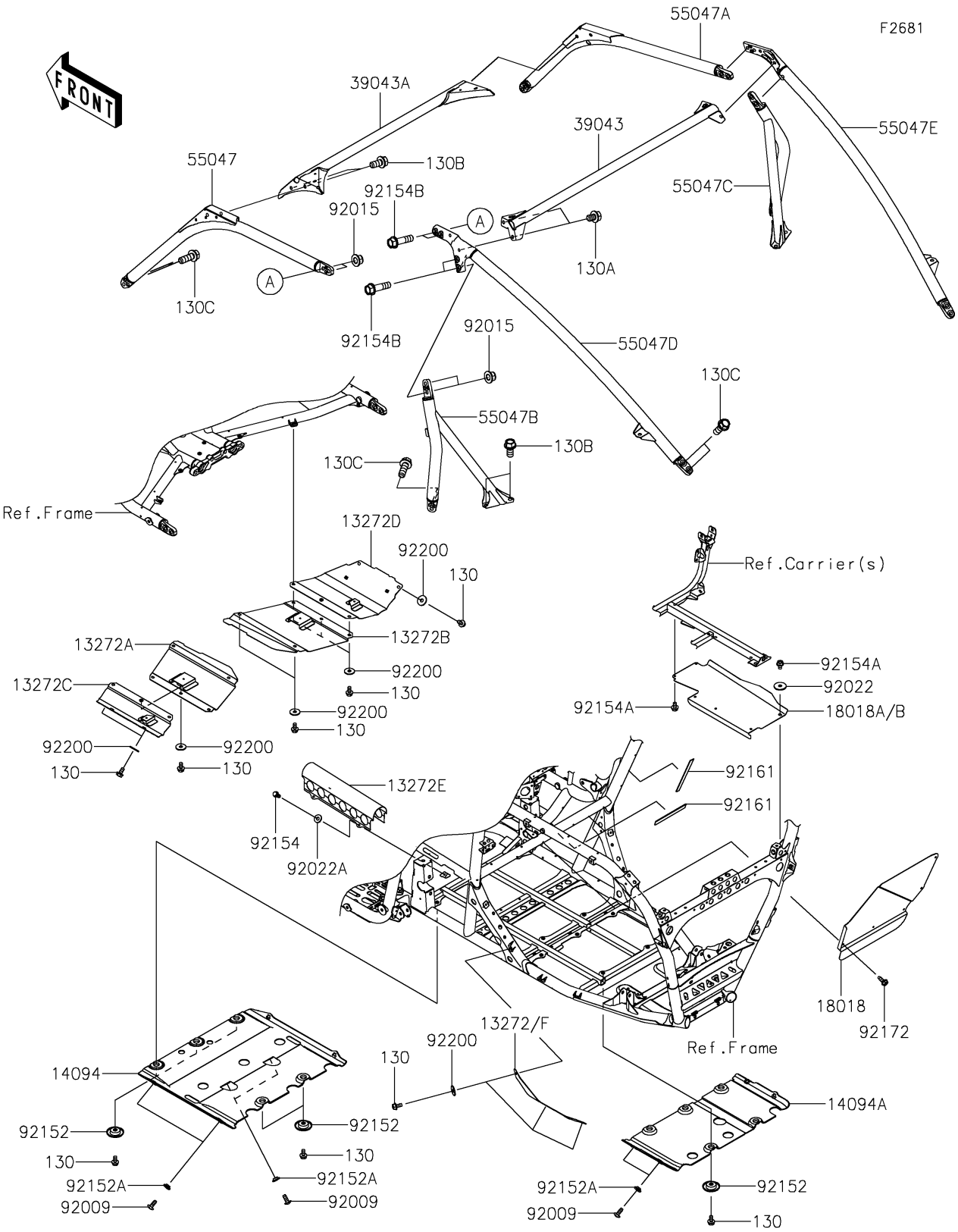

© 2026 Kawasaki Motors Corp., U.S.A.

2026 Teryx KRX 1000

PARTS LIST

Guards/Cab Frame

ITEM NAME	PART NUMBER	QUANTITY

© 2026 Kawasaki Motors Corp., U.S.A.