2027 TERYX KRX® 1000

PARTS DIAGRAM

Driven Converter/Drive Belt

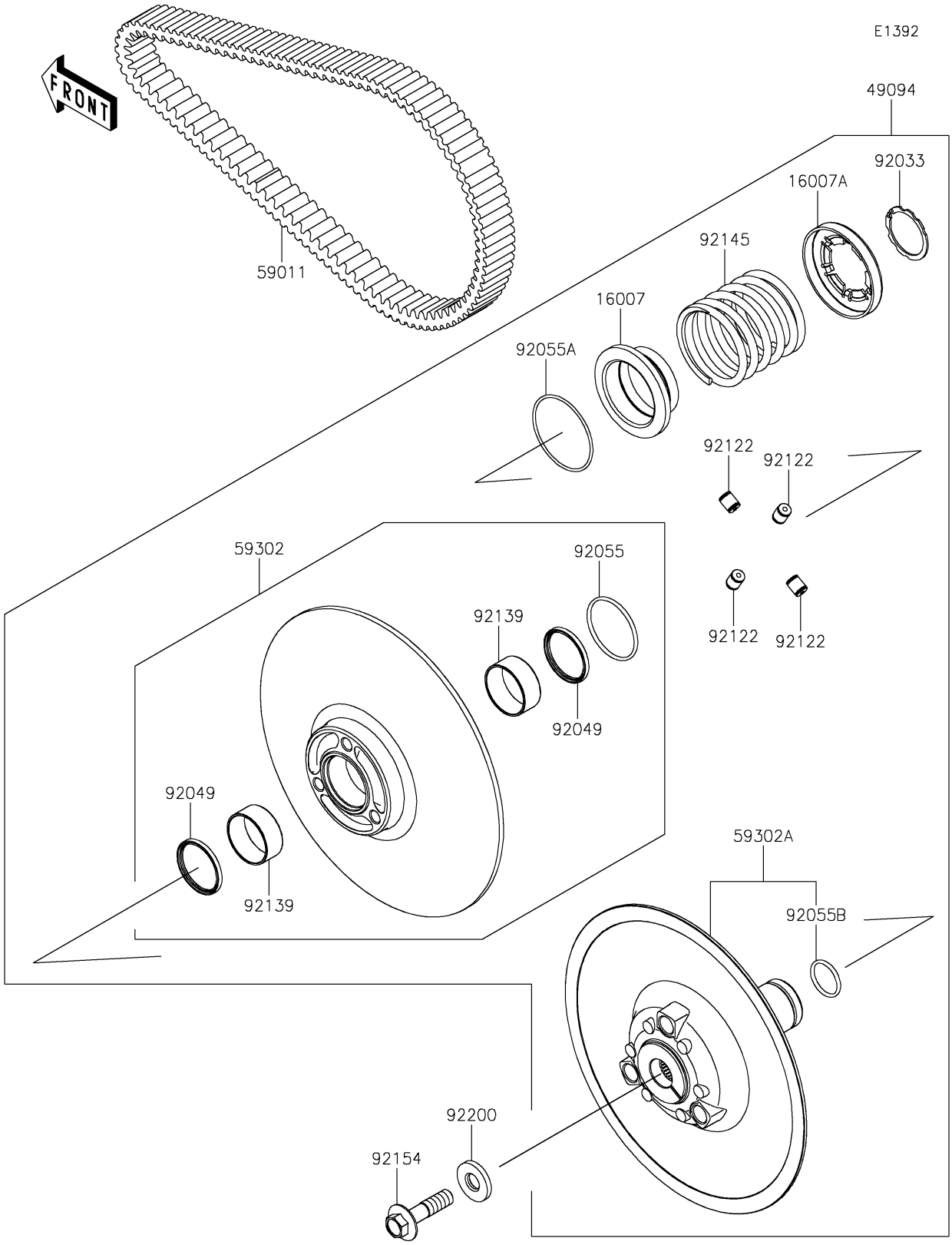

© 2026 Kawasaki Motors Corp., U.S.A.

2027 TERYX KRX® 1000

PARTS LIST

Driven Converter/Drive Belt

ITEM NAME	PART NUMBER	QUANTITY

© 2026 Kawasaki Motors Corp., U.S.A.