2027 MULE PRO-FXT 1000 Platinum

PARTS DIAGRAM

Rear Bumper

F2910A

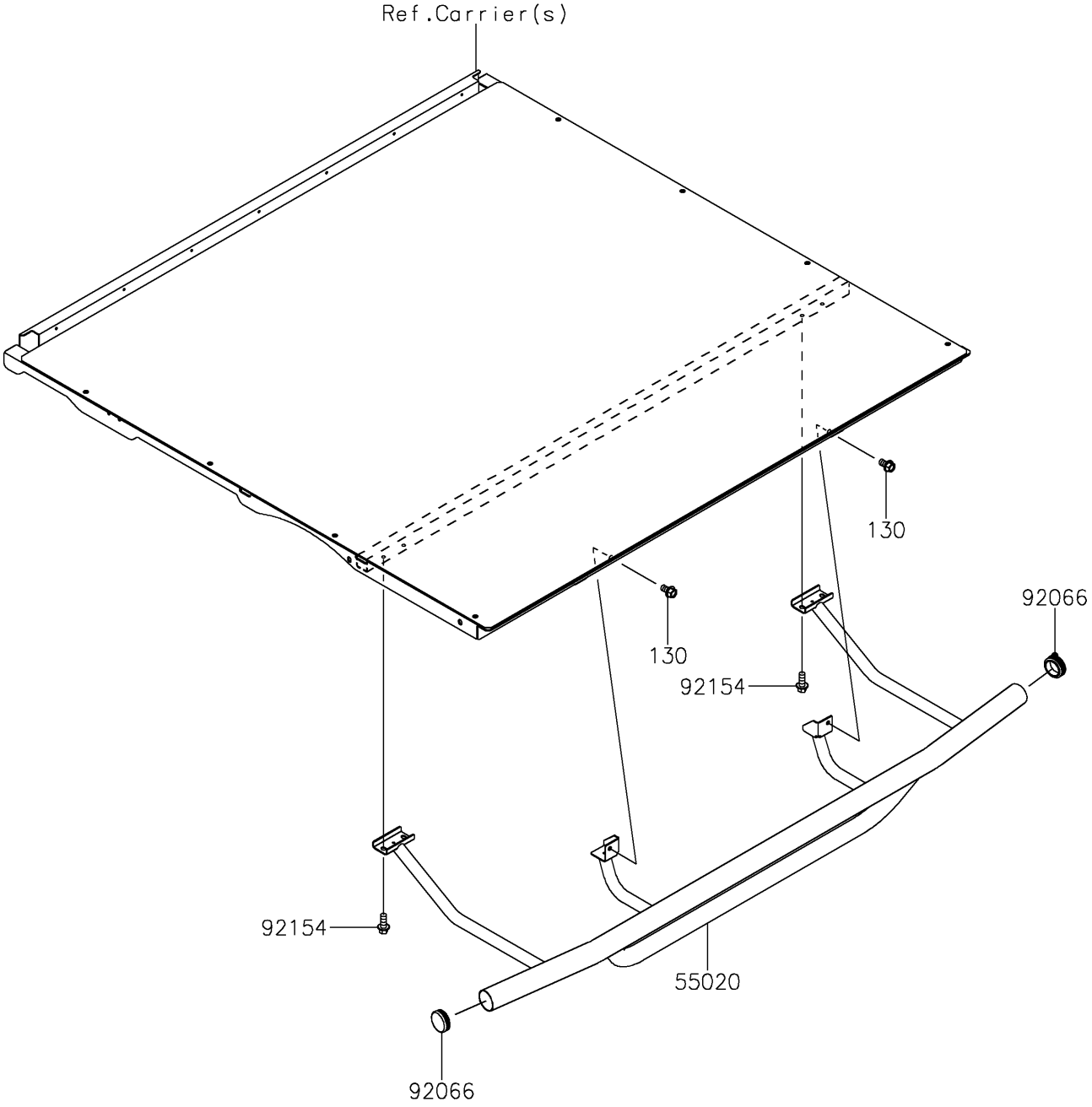

© 2026 Kawasaki Motors Corp., U.S.A.

2027 MULE PRO-FXT 1000 Platinum

PARTS LIST

Rear Bumper

ITEM NAME	PART NUMBER	QUANTITY

© 2026 Kawasaki Motors Corp., U.S.A.