2027 MULE PRO-FXT 1000 Platinum

Kawasaki
Let the Good Times Roll®

PARTS DIAGRAM

Door

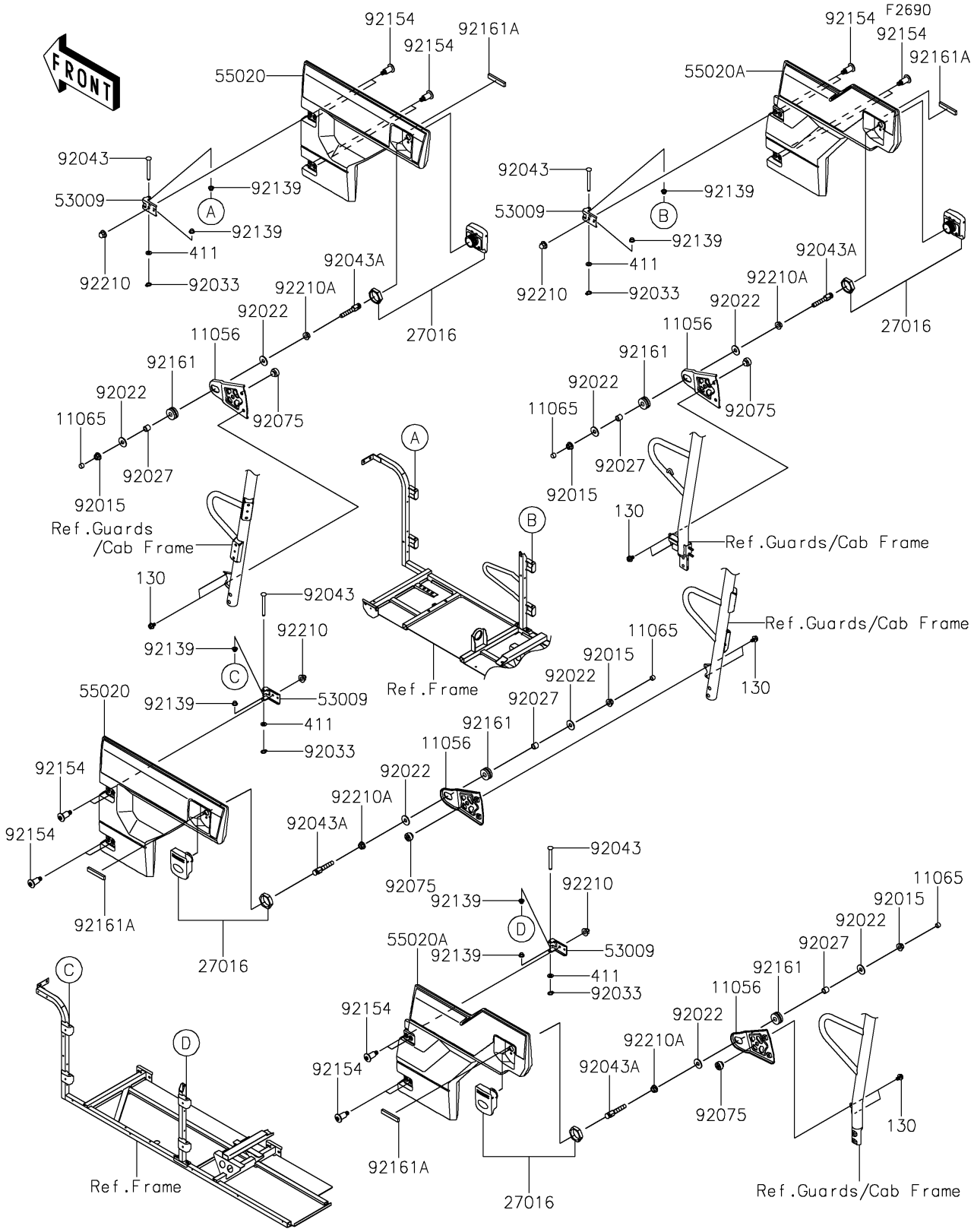

© 2026 Kawasaki Motors Corp., U.S.A.

2027 MULE PRO-FXT 1000 Platinum

Kawasaki
Let the Good Times Roll®

PARTS LIST

Door

ITEM NAME	PART NUMBER	QUANTITY
BRACKET,DOOR GUARD (Ref # 11056)	11056-2856	4
CAP (Ref # 11065)	11065-7504	4
LOCK-ASSY (Ref # 27016)	27016-0084	4
HINGE (Ref # 53009)	53009-0303	8
GUARD,FR,F.BLACK (Ref # 55020)	55020-0936-6Z	2
GUARD,RR,F.BLACK (Ref # 55020A)	55020-0937-6Z	2
NUT,8MM (Ref # 92015)	92015-1432	4
WASHER,PLAIN (Ref # 92022)	92022-3026	8
COLLAR,8.8X12X10.7 (Ref # 92027)	92027-102	4
RING-SNAP (Ref # 92033)	92033-0719	8
PIN,6X56 (Ref # 92043)	92043-0743	8
PIN,DOOR LOCK (Ref # 92043A)	92043-0788	4
DAMPER (Ref # 92075)	92075-1598	4
BUSHING,6X8X6 (Ref # 92139)	92139-0709	16
BOLT,SOCKET,8X30 (Ref # 92154)	92154-1369	16
DAMPER,10X26X11.5 (Ref # 92161)	92161-1691	4
DAMPER,9X52X5 (Ref # 92161A)	92161-1837	4
NUT,CAP,8MM (Ref # 92210)	92210-0488	16
NUT,FLANGED,8MM (Ref # 92210A)	92210-0555	4
BOLT-FLANGED,6X10 (Ref # 130)	130BA0610	8
WASHER-PLAIN,6MM (Ref # 411)	411AB0600	8

© 2026 Kawasaki Motors Corp., U.S.A.