# 2027 MULE PRO-FXT 1000 Platinum

Kawasaki
Let the Good Times Roll®

## PARTS DIAGRAM

### Front Fender(s)

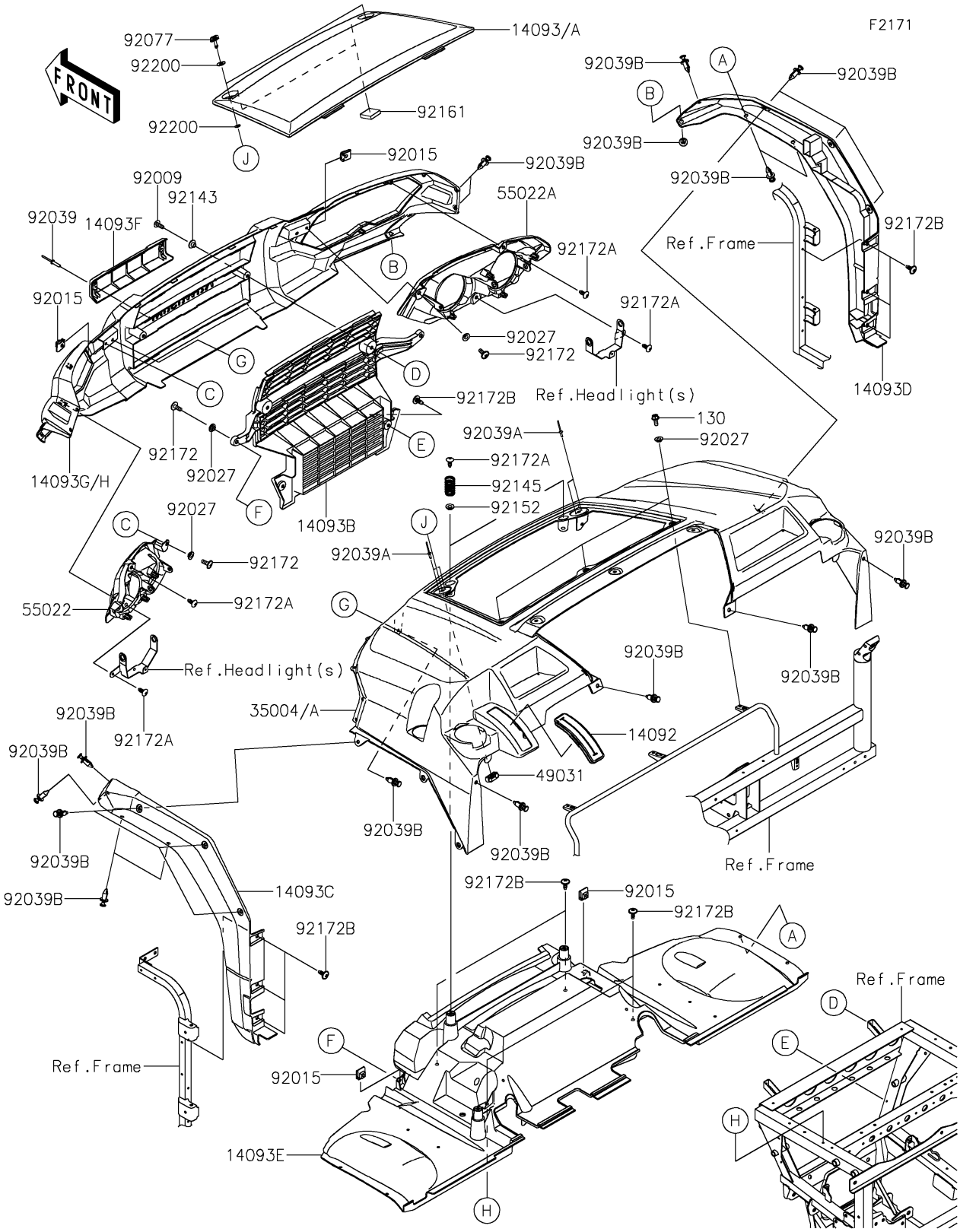


© 2026 Kawasaki Motors Corp., U.S.A.

# 2027 MULE PRO-FXT 1000 Platinum

## PARTS LIST

### Front Fender(s)

| ITEM NAME | PART NUMBER | QUANTITY |
|---|---|---|

© 2026 Kawasaki Motors Corp., U.S.A.