2025 MULE PRO-FXT 1000 Platinum

PARTS DIAGRAM

Frame(DRFNN-DSSNL)

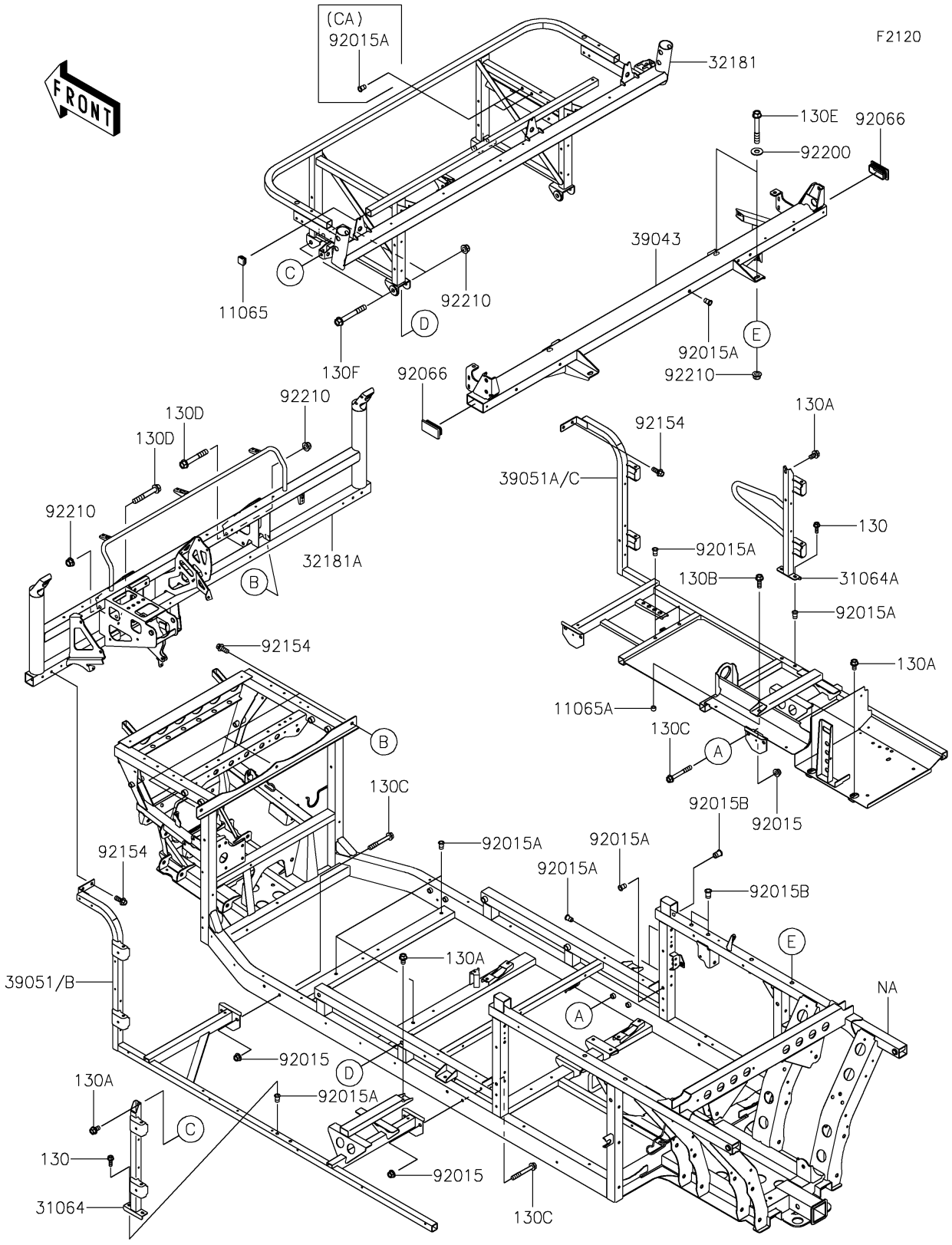

© 2026 Kawasaki Motors Corp., U.S.A.

2025 MULE PRO-FXT 1000 Platinum

Kawasaki
Let the Good Times Roll®

PARTS LIST

Frame(DRFNN-DSSNL)

ITEM NAME	PART NUMBER	QUANTITY

© 2026 Kawasaki Motors Corp., U.S.A.