2027 MULE PRO-FXT 1000 Platinum

Kawasaki
Let the Good Times Roll®

PARTS DIAGRAM

Air Cleaner-Belt Converter

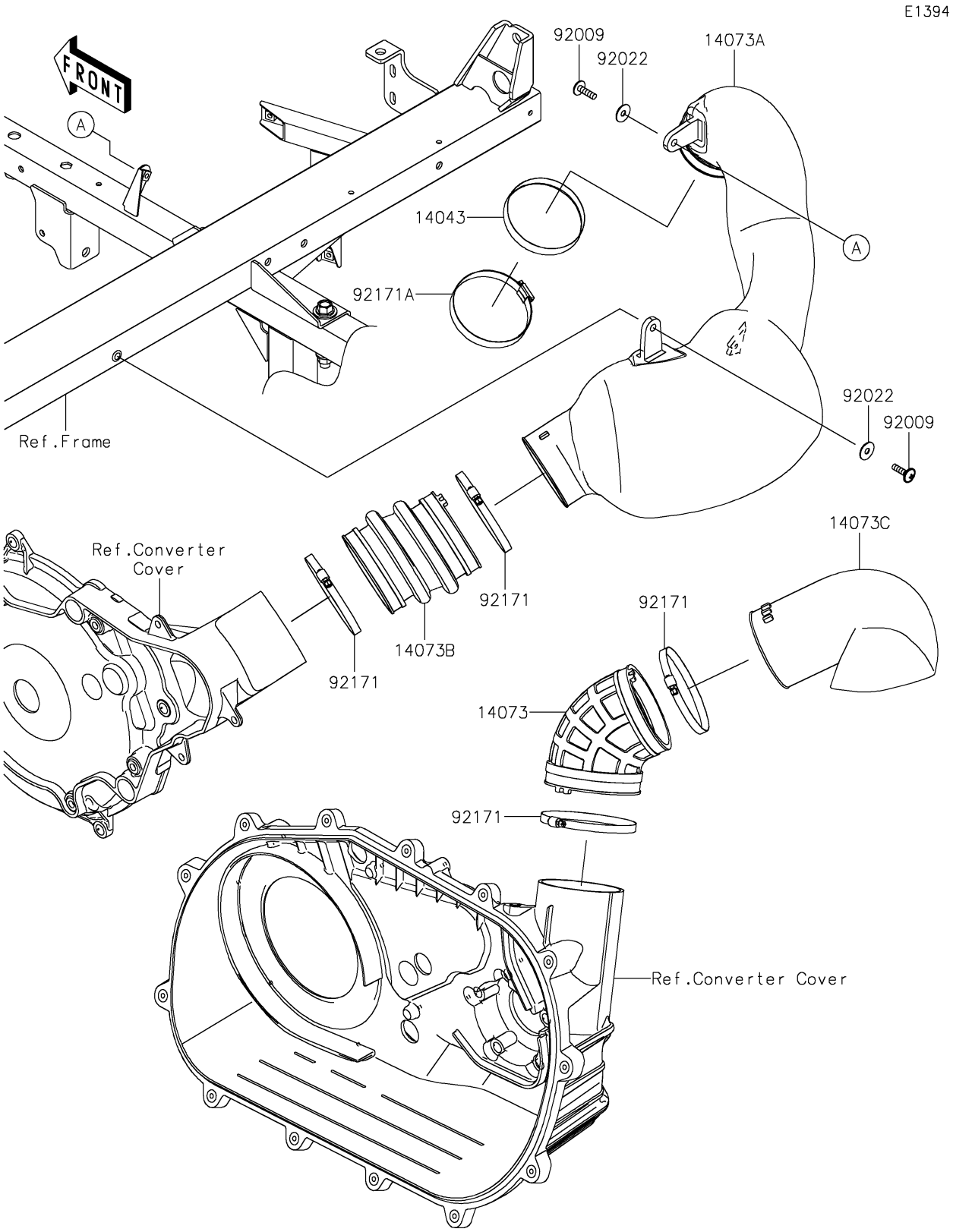

© 2026 Kawasaki Motors Corp., U.S.A.

2027 MULE PRO-FXT 1000 Platinum

PARTS LIST

Air Cleaner-Belt Converter

ITEM NAME	PART NUMBER	QUANTITY

© 2026 Kawasaki Motors Corp., U.S.A.