2024 MULE PRO-FXT™ 1000 LE CAMO

Kawasaki
Let the Good Times Roll®

PARTS DIAGRAM

Decals(BRFNN/BRFNL)

F2861

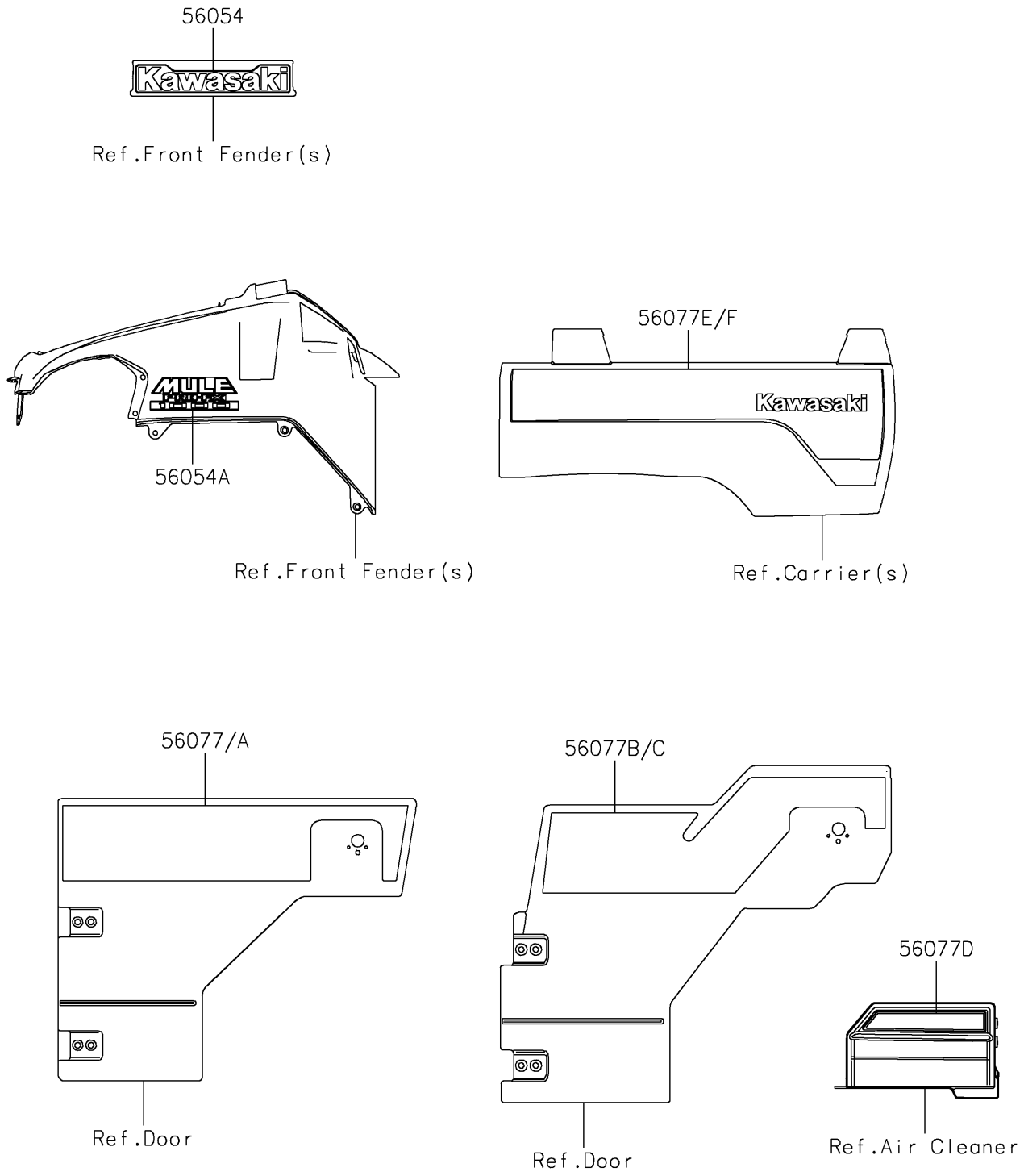

© 2026 Kawasaki Motors Corp., U.S.A.

2024 MULE PRO-FXT™ 1000 LE CAMO

Kawasaki
Let the Good Times Roll®

PARTS LIST

Decals(BRFNN/BRFNL)

ITEM NAME	PART NUMBER	QUANTITY
MARK,KAWASAKI (Ref # 56054)	56054-3890	1
MARK,MULE PRO-FXT 1000 (Ref # 56054A)	56054-4015	2
PATTERN,SIDE GUARD,LH,FR (Ref # 56077)	56077-0434	1
PATTERN,SIDE GUARD,RH,FR (Ref # 56077A)	56077-0435	1
PATTERN,SIDE GUARD,LH,RR (Ref # 56077B)	56077-0436	1
PATTERN,SIDE GUARD,RH,RR (Ref # 56077C)	56077-0437	1
PATTERN,AIR FILTER COVER (Ref # 56077D)	56077-0438	1
PATTERN,SIDE CARRIER,LH (Ref # 56077E)	56077-0439	1
PATTERN,SIDE CARRIER,RH (Ref # 56077F)	56077-0440	1

© 2026 Kawasaki Motors Corp., U.S.A.