# 2027 MULE PRO-FXT 1000 LE CAMO

## PARTS DIAGRAM

### Taillight(s)

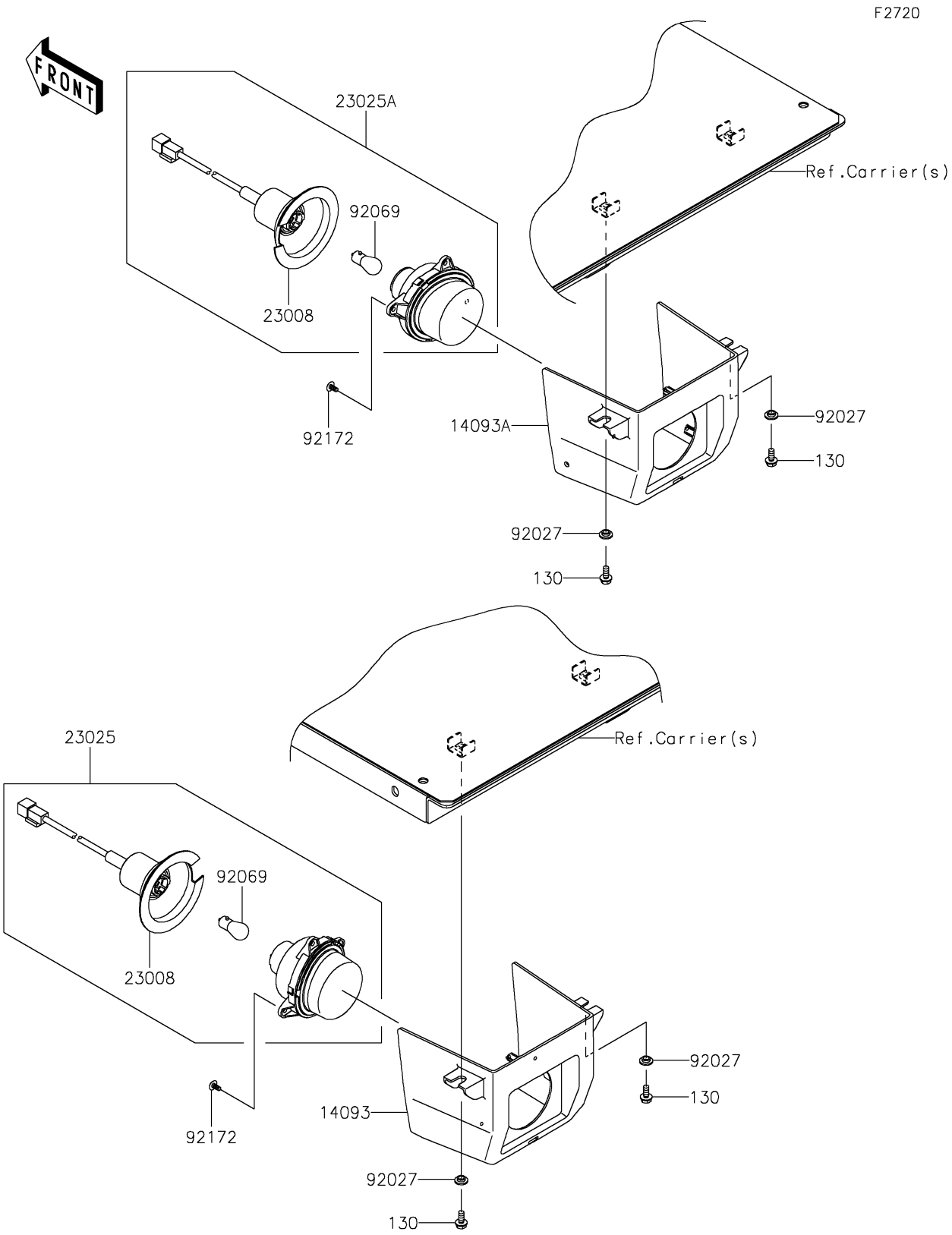


© 2026 Kawasaki Motors Corp., U.S.A.

# 2027 MULE PRO-FXT 1000 LE CAMO

Kawasaki
Let the Good Times Roll®

## PARTS LIST

### Taillight(s)

| ITEM NAME | PART NUMBER | QUANTITY |
|---|---|---|
| COVER,TAIL LAMP,LH (Ref # 14093) | 14093-0580 | 1 |
| COVER,TAIL LAMP,RH (Ref # 14093A) | 14093-0581 | 1 |
| SOCKET-ASSY (Ref # 23008) | 23008-0162 | 2 |
| LAMP-TAIL,LH (Ref # 23025) | 23025-0334 | 1 |
| LAMP-TAIL,RH (Ref # 23025A) | 23025-0341 | 1 |
| COLLAR,L=4.6 (Ref # 92027) | 92027-1168 | 4 |
| BULB,12V 21/5W (Ref # 92069) | 92069-0072 | 2 |
| SCREW,TAPPING,5X10 (Ref # 92172) | 92172-0262 | 6 |
| BOLT-FLANGED,6X14 (Ref # 130) | 130BA0614 | 4 |

© 2026 Kawasaki Motors Corp., U.S.A.