2027 MULE PRO-FXT 1000 LE CAMO

Kawasaki
Let the Good Times Roll®

PARTS DIAGRAM

Steering Shaft

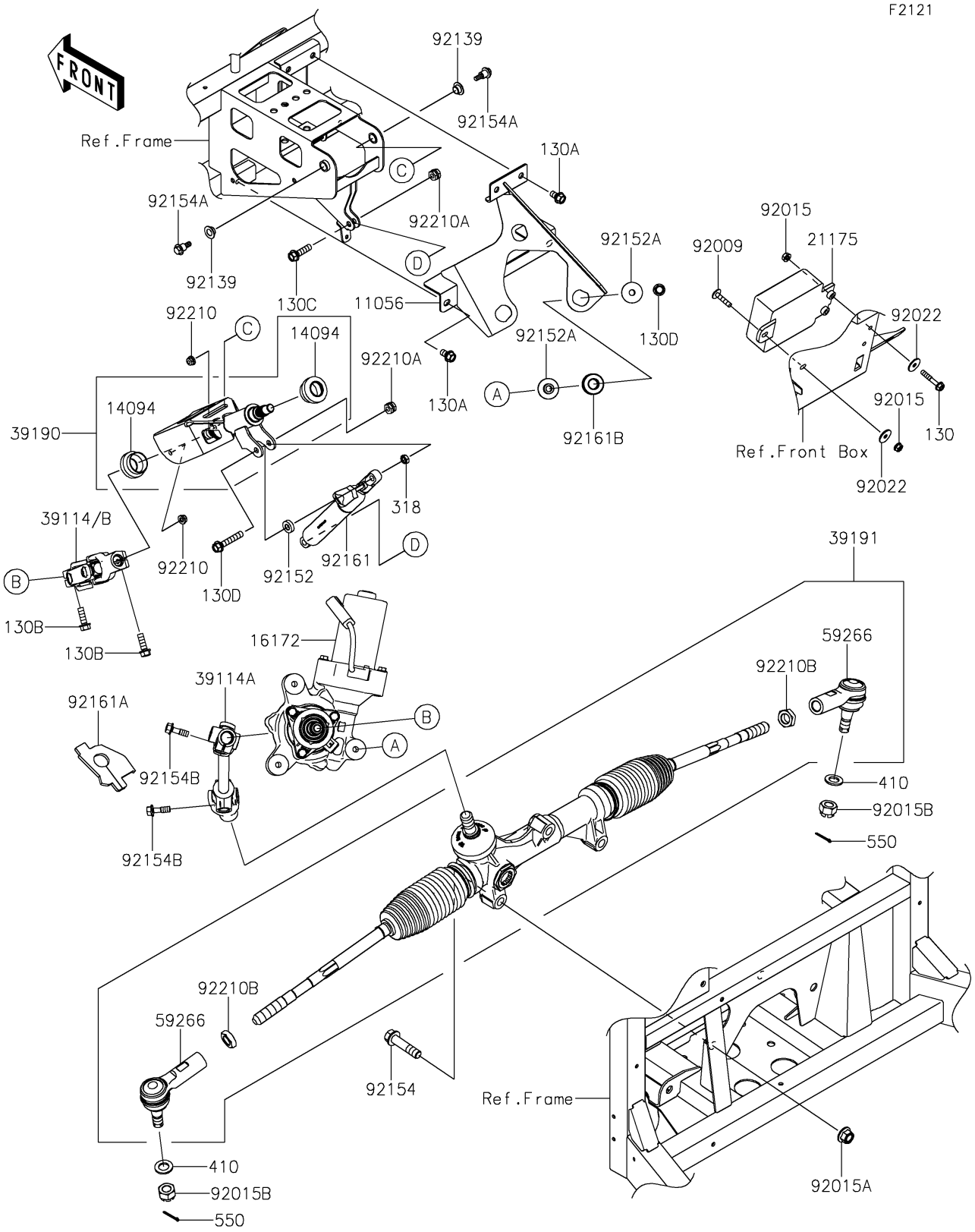

© 2026 Kawasaki Motors Corp., U.S.A.

2027 MULE PRO-FXT 1000 LE CAMO

PARTS LIST

Steering Shaft

ITEM NAME	PART NUMBER	QUANTITY

© 2026 Kawasaki Motors Corp., U.S.A.