2027 MULE PRO-FXT 1000 LE CAMO

Kawasaki
Let the Good Times Roll®

PARTS DIAGRAM

Ignition System

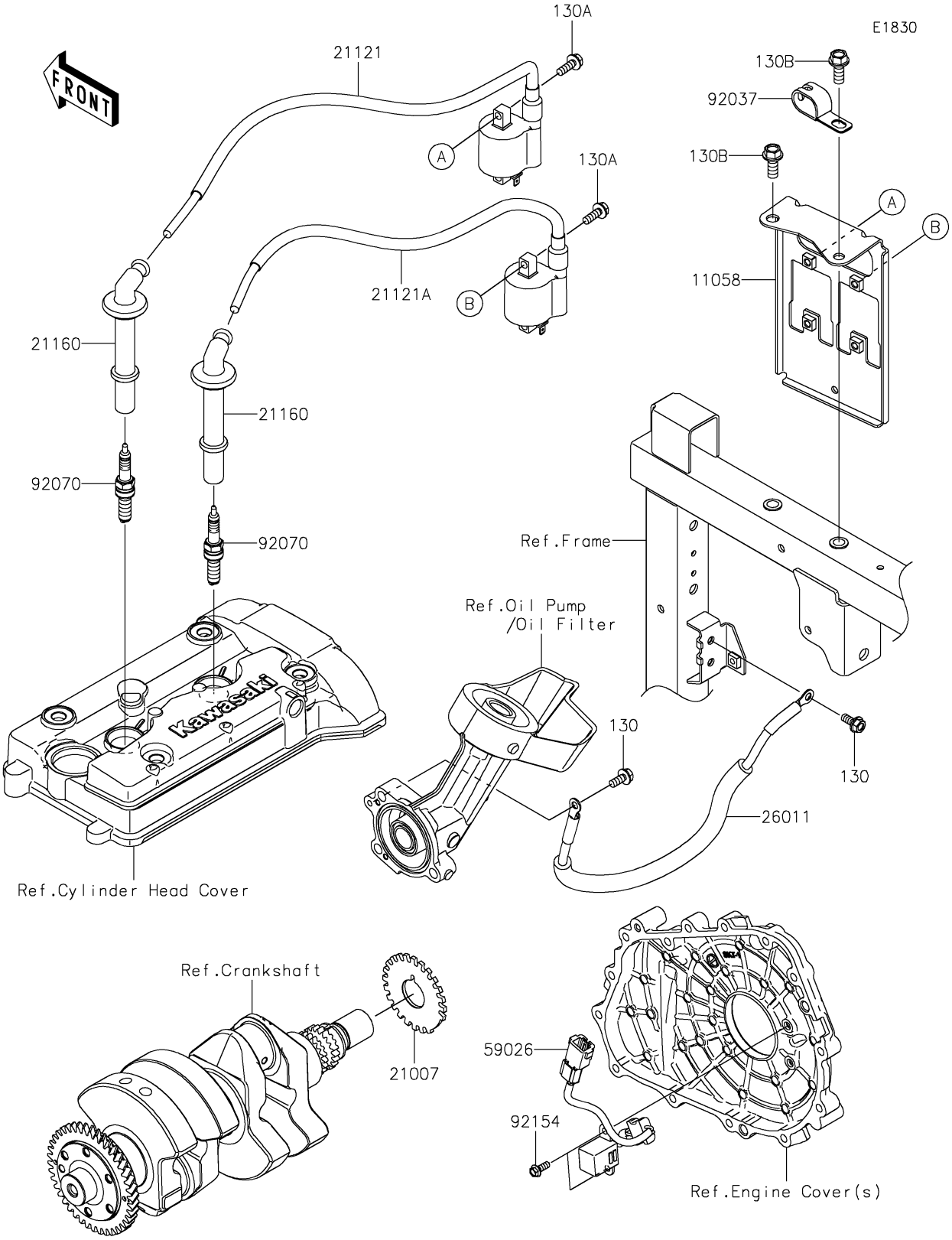

© 2026 Kawasaki Motors Corp., U.S.A.

2027 MULE PRO-FXT 1000 LE CAMO

Kawasaki
Let the Good Times Roll®

PARTS LIST

Ignition System

ITEM NAME	PART NUMBER	QUANTITY
BRACKET,COIL-IGNITION (Ref # 11058)	11058-0333	1
ROTOR (Ref # 21007)	21007-0726	1
COIL-IGNITION,#1 (Ref # 21121)	21121-0751	1
COIL-IGNITION,#2 (Ref # 21121A)	21121-0752	1
CAP-ASSY-PLUG (Ref # 21160)	21160-0030	2
WIRE-LEAD (Ref # 26011)	26011-2420	1
COIL-PULSING (Ref # 59026)	59026-0566	1
CLAMP (Ref # 92037)	92037-2204	1
PLUG-SPARK,LMAR9G(NGK) (Ref # 92070)	92070-0716	2
BOLT,FLANGED,5X14 (Ref # 92154)	92154-3884	2
BOLT-FLANGED,6X14 (Ref # 130)	130BA0614	2
BOLT-FLANGED,6X18 (Ref # 130A)	130BA0618	4
BOLT-FLANGED,8X20 (Ref # 130B)	130BA0820	2

© 2026 Kawasaki Motors Corp., U.S.A.