2027 MULE PRO-FXT 1000 LE CAMO

PARTS DIAGRAM

Camshaft(s)/Tensioner

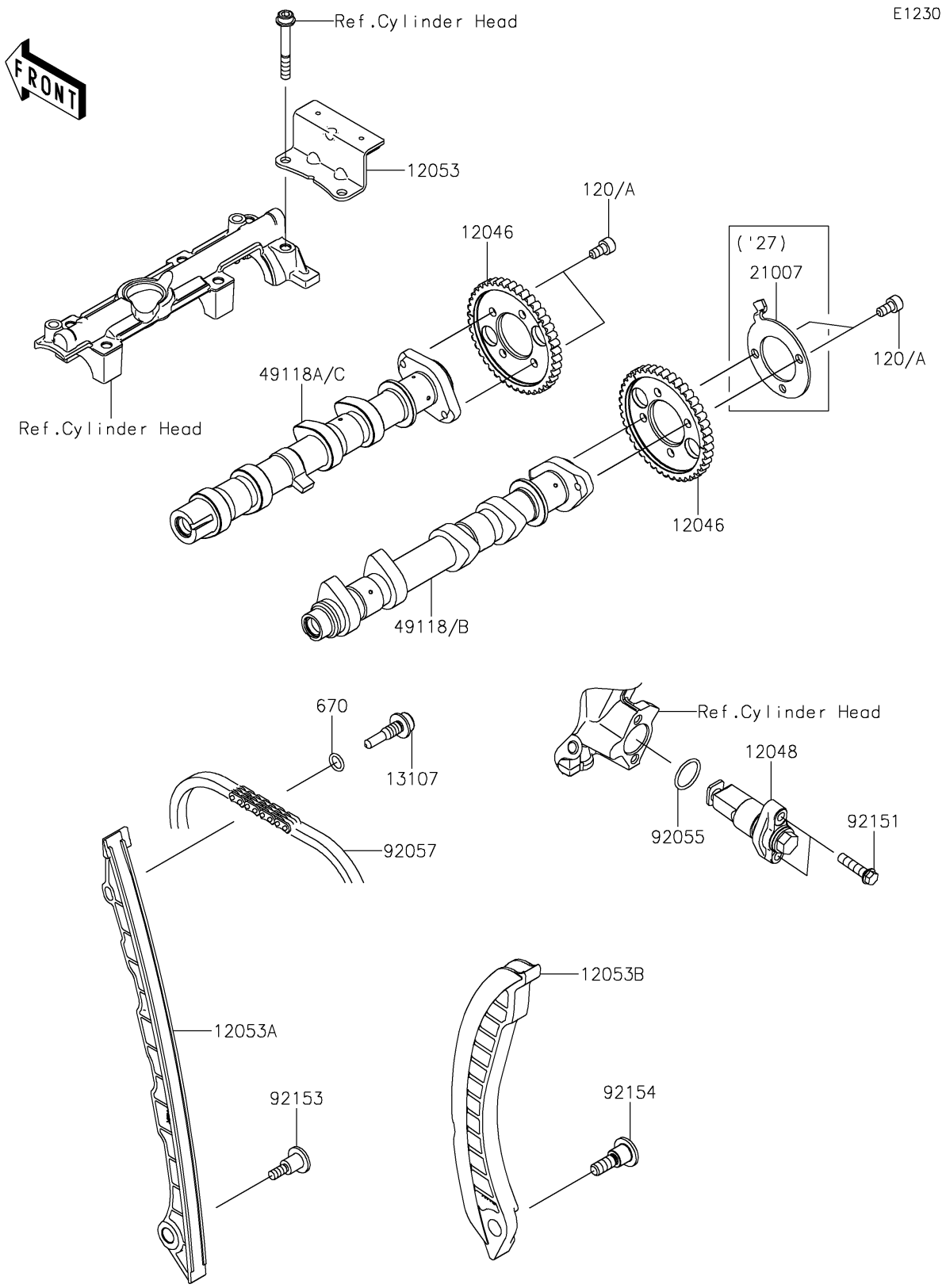

© 2026 Kawasaki Motors Corp., U.S.A.

2027 MULE PRO-FXT 1000 LE CAMO

Kawasaki
Let the Good Times Roll®

PARTS LIST

Camshaft(s)/Tensioner

ITEM NAME	PART NUMBER	QUANTITY
SPROCKET,CAM,42T (Ref # 12046)	12046-0618	2
TENSIONER-ASSY (Ref # 12048)	12048-0102	1
GUIDE-CHAIN,UPP (Ref # 12053)	12053-0278	1
GUIDE-CHAIN,FR (Ref # 12053A)	12053-0279	1
GUIDE-CHAIN,RR (Ref # 12053B)	12053-0280	1
SHAFT,CHAIN GUIDE (Ref # 13107)	13107-0157	1
ROTOR (Ref # 21007)	21007-0789	1
CAMSHAFT-COMP,IN (Ref # 49118)	49118-1285	1
CAMSHAFT-COMP,EX (Ref # 49118A)	49118-1286	1
CAMSHAFT-COMP,IN (Ref # 49118B)	49118-1332	1
CAMSHAFT-COMP,EX (Ref # 49118C)	49118-1341	1
RING-O,18.8X1.9 (Ref # 92055)	92055-086	1
CHAIN,98XRH2015-148M (Ref # 92057)	92057-0769	1
BOLT,FLANGED-SMALL,6X25 (Ref # 92151)	92151-1930	2
BOLT,SOCKET,6X24.5 (Ref # 92153)	92153-1200	1
BOLT,8X29 (Ref # 92154)	92154-3930	1
BOLT-SOCKET,6X12 (Ref # 120)	120CA0612	4
BOLT-SOCKET,6X14 (Ref # 120A)	120CA0614	4
O RING,9MM (Ref # 670)	670D1509	1

© 2026 Kawasaki Motors Corp., U.S.A.