2027 MULE PRO-FXT™ 1000 LE

Kawasaki
Let the Good Times Roll®

PARTS DIAGRAM

Frame(ATFNN/ATFNL)

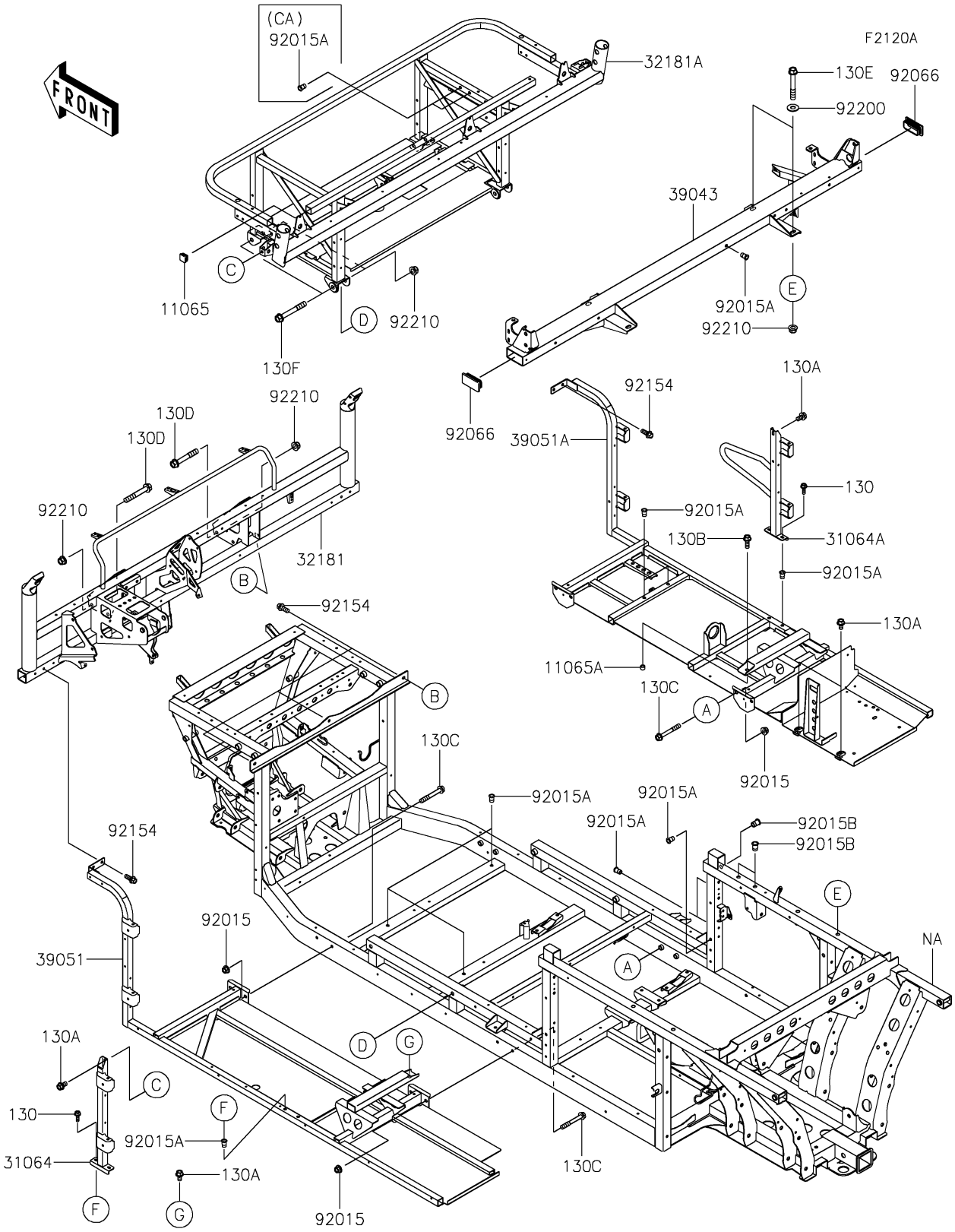

© 2026 Kawasaki Motors Corp., U.S.A.

2027 MULE PRO-FXT™ 1000 LE

Kawasaki
Let the Good Times Roll®

PARTS LIST

Frame(ATFNN/ATFNL)

ITEM NAME	PART NUMBER	QUANTITY
CAP (Ref # 11065)	11065-0901	1
CAP (Ref # 11065A)	11065-7504	1
PIPE-COMP,RR DOOR HINGE,LH (Ref # 31064)	31064-0704	1
PIPE-COMP,RR DOOR HINGE,RH (Ref # 31064A)	31064-0705	1
FRAME-SUB-COMP,DASH PANEL (Ref # 32181)	32181-0048	1
FRAME-SUB-COMP,SEAT (Ref # 32181A)	32181-0100	1
CROSSMEMBER-COMP,C PILLAR (Ref # 39043)	39043-0039	1
FRAME-COMP-SIDE,LH (Ref # 39051)	39051-0043	1
FRAME-COMP-SIDE,RH (Ref # 39051A)	39051-0044	1
NUT,8MM (Ref # 92015)	92015-1432	8
NUT,POP,8MM,L=16.5 (Ref # 92015B)	92015-1793	3
PLUG (Ref # 92066)	92066-7505	2
BOLT,FLANGED,8X20 (Ref # 92154)	92154-1226	7
WASHER,10.5X25X1.6 (Ref # 92200)	92200-1595	4
NUT,LOCK,FLANGED,10MM (Ref # 92210)	92210-0276	12
BOLT-FLANGED,6X18 (Ref # 130)	130BA0618	4
BOLT-FLANGED,8X14 (Ref # 130A)	130BA0814	5
BOLT-FLANGED,8X22 (Ref # 130B)	130BA0822	1
BOLT-FLANGED,8X60 (Ref # 130C)	130BA0860	8
BOLT-FLANGED,10X65 (Ref # 130D)	130BA1065	4
BOLT-FLANGED,10X70 (Ref # 130E)	130BA1070	4
BOLT-FLANGED,10X75 (Ref # 130F)	130CA1075	4

© 2026 Kawasaki Motors Corp., U.S.A.