2026 MULE PRO-FXT 1000 LE

PARTS DIAGRAM

Valve(s)

E1210

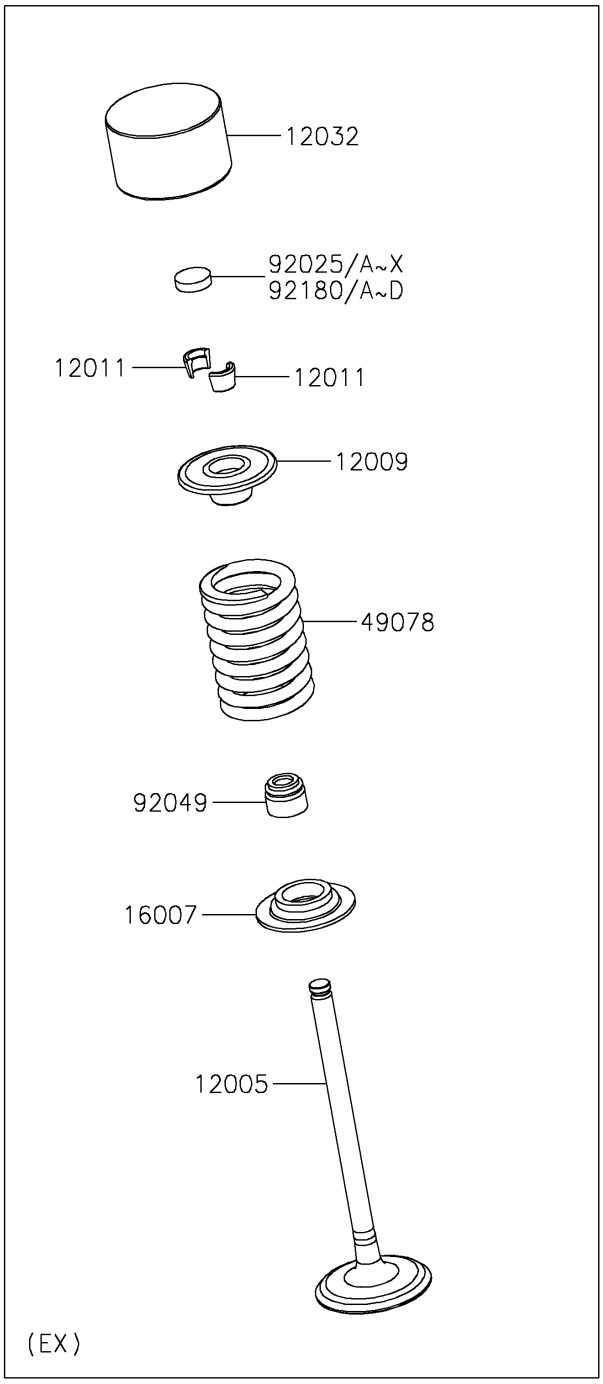

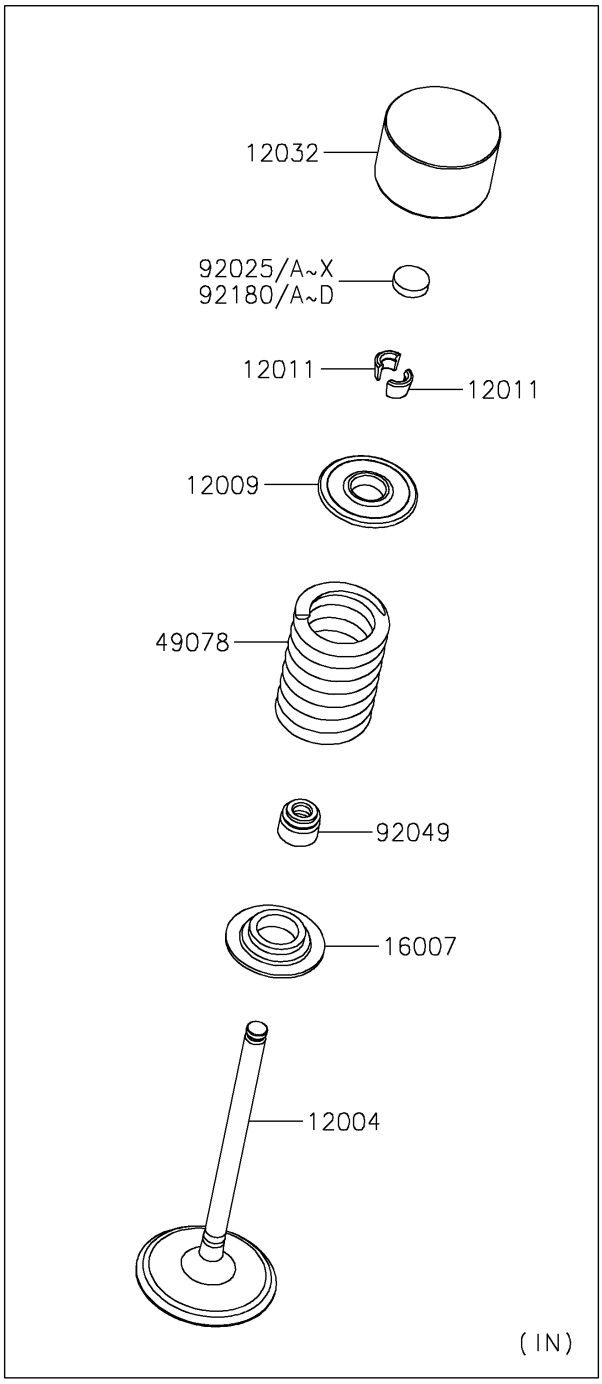

© 2026 Kawasaki Motors Corp., U.S.A.

2026 MULE PRO-FXT 1000 LE

PARTS LIST

Valve(s)

ITEM NAME	PART NUMBER	QUANTITY
VALVE-INTAKE (Ref # 12004)	12004-0777	4
VALVE-EXHAUST (Ref # 12005)	12005-0801	4
RETAINER-VALVE SPRING (Ref # 12009)	12009-0042	8
COLLET (Ref # 12011)	12011-1003	16
TAPPET (Ref # 12032)	12032-0030	8
SEAT-SPRING (Ref # 16007)	16007-0753	8
SPRING-ENGINE VALVE (Ref # 49078)	49078-0799	8
SHIM,T=2.00 (Ref # 92025)	92025-1870	AR
SHIM,T=2.05 (Ref # 92025A)	92025-1871	AR
SHIM,T=2.10 (Ref # 92025B)	92025-1872	AR
SHIM,T=2.15 (Ref # 92025C)	92025-1873	AR
SHIM,T=2.20 (Ref # 92025D)	92025-1874	AR
SHIM,T=2.25 (Ref # 92025E)	92025-1875	AR
SHIM,T=2.30 (Ref # 92025F)	92025-1876	AR
SHIM,T=2.35 (Ref # 92025G)	92025-1877	AR
SHIM,T=2.40 (Ref # 92025H)	92025-1878	AR
SHIM,T=2.45 (Ref # 92025I)	92025-1879	AR
SHIM,T=2.50 (Ref # 92025J)	92025-1880	8
SHIM,T=2.55 (Ref # 92025K)	92025-1881	AR
SHIM,T=2.60 (Ref # 92025L)	92025-1882	AR
SHIM,T=2.65 (Ref # 92025M)	92025-1883	AR
SHIM,T=2.70 (Ref # 92025N)	92025-1884	AR
SHIM,T=2.75 (Ref # 92025O)	92025-1885	AR
SHIM,T=2.80 (Ref # 92025P)	92025-1886	AR
SHIM,T=2.85 (Ref # 92025Q)	92025-1887	AR
SHIM,T=2.90 (Ref # 92025R)	92025-1888	AR
SHIM,T=2.95 (Ref # 92025S)	92025-1889	AR
SHIM,T=3.00 (Ref # 92025T)	92025-1890	AR
SHIM,T=2.425 (Ref # 92025U)	92025-1982	AR

© 2026 Kawasaki Motors Corp., U.S.A.

2026 MULE PRO-FXT 1000 LE

PARTS LIST

Valve(s)

ITEM NAME	PART NUMBER	QUANTITY
SHIM,T=2.475 (Ref # 92025V)	92025-1983	AR
SHIM,T=2.525 (Ref # 92025W)	92025-1984	AR
SHIM,T=2.575 (Ref # 92025X)	92025-1985	AR
SEAL-OIL,RVC2-5.5X8.5X8.3 (Ref # 92049)	92049-1062	8
SHIM,T=2.375 (Ref # 92180)	92180-1058	AR
SHIM,T=2.625 (Ref # 92180A)	92180-1059	AR
SHIM,T=2.675 (Ref # 92180B)	92180-1194	AR
SHIM,T=2.725 (Ref # 92180C)	92180-1195	AR
SHIM,T=2.775 (Ref # 92180D)	92180-1196	AR

© 2026 Kawasaki Motors Corp., U.S.A.