2027 MULE PRO-FXR 1000 LE

PARTS DIAGRAM

Sun Top

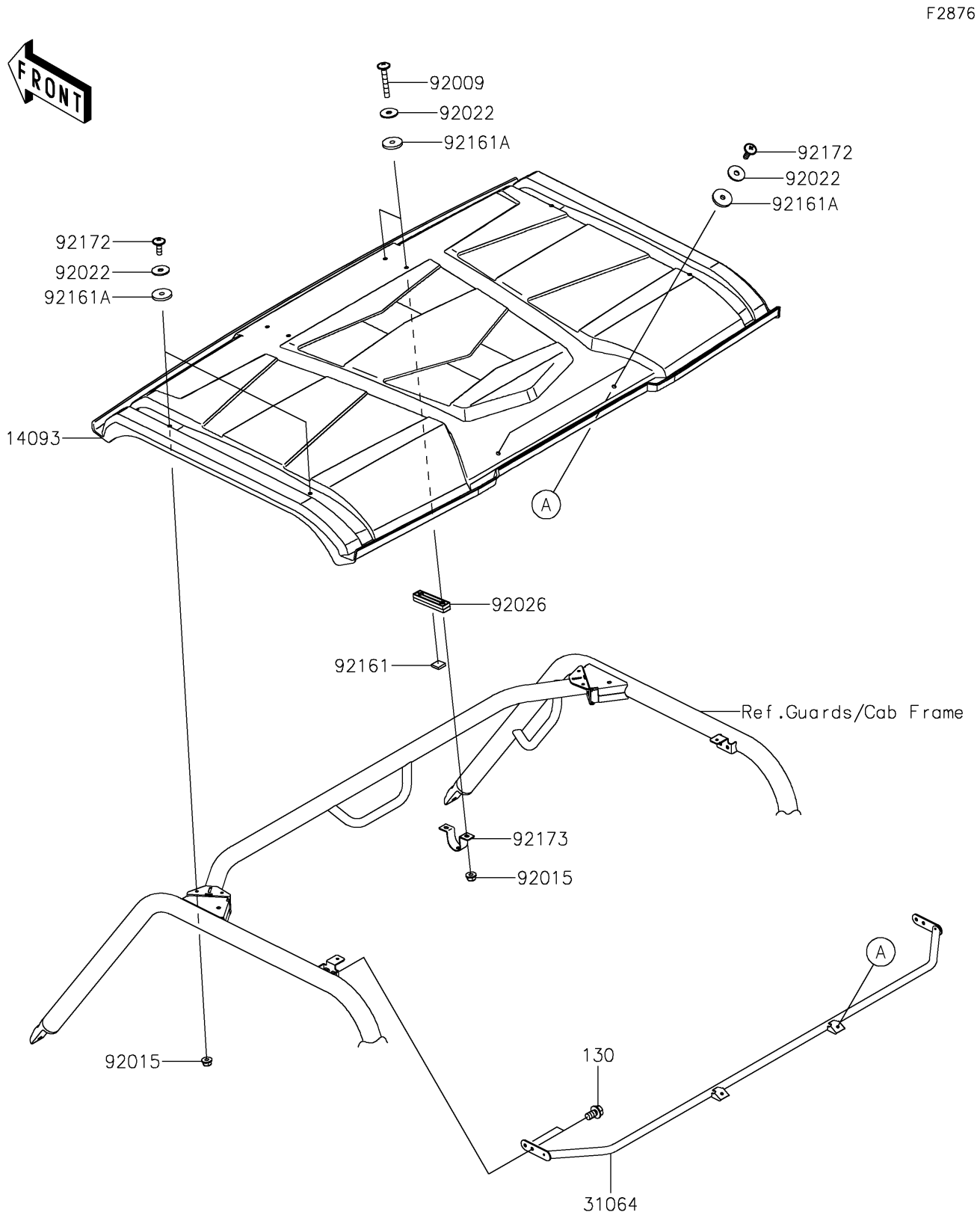

© 2026 Kawasaki Motors Corp., U.S.A.

2027 MULE PRO-FXR 1000 LE

PARTS LIST

Sun Top

ITEM NAME	PART NUMBER	QUANTITY
COVER,SUNTOP (Ref # 14093)	14093-0588	1
PIPE-COMP (Ref # 31064)	31064-0690	1
SCREW,6X40 (Ref # 92009)	92009-1898	4
NUT,LOCK,FLANGED,6MM (Ref # 92015)	92015-1603	6
WASHER,6.5X22X1.6 (Ref # 92022)	92022-237	10
SPACER,BLOCK (Ref # 92026)	92026-0763	2
DAMPER,25.4X25.4X6.3 (Ref # 92161)	92161-1405	2
DAMPER,6X25X3.15 (Ref # 92161A)	92161-1633	10
SCREW,6X18 (Ref # 92172)	92172-0002	6
CLAMP,U (Ref # 92173)	92173-1224	2
BOLT-FLANGED,8X14 (Ref # 130)	130CA0814	4

© 2026 Kawasaki Motors Corp., U.S.A.