2027 MULE PRO-FXR 1000 LE

PARTS DIAGRAM

Decals(NVFNN/NVFNL)

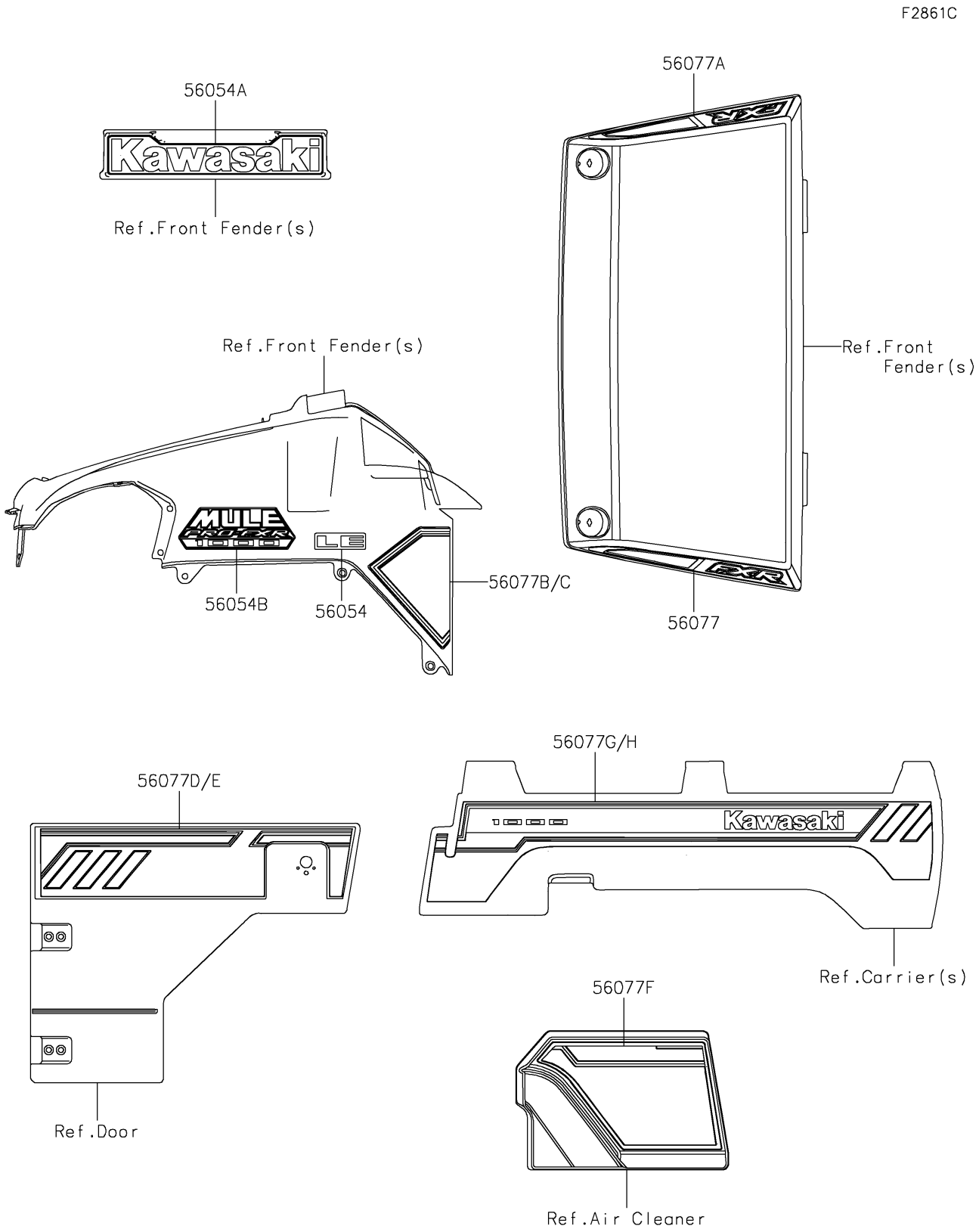

© 2026 Kawasaki Motors Corp., U.S.A.

2027 MULE PRO-FXR 1000 LE

PARTS LIST

Decals(NVFNN/NVFNL)

ITEM NAME	PART NUMBER	QUANTITY
MARK,FR FENDER,LE (Ref # 56054)	56054-1569	2
MARK,KAWASAKI (Ref # 56054A)	56054-3890	1
MARK,MULE PRO-FXR 1000 (Ref # 56054B)	56054-7105	2
PATTERN,HOOD COVER,LH (Ref # 56077)	56077-7458	1
PATTERN,HOOD COVER,RH (Ref # 56077A)	56077-7459	1
PATTERN,FR FENDER,LH (Ref # 56077B)	56077-7460	1
PATTERN,FR FENDER,RH (Ref # 56077C)	56077-7461	1
PATTERN,SIDE GUARD,LH (Ref # 56077D)	56077-7462	1
PATTERN,SIDE GUARD,RH (Ref # 56077E)	56077-7463	1
PATTERN,AIR FILTER COVER (Ref # 56077F)	56077-7464	1
PATTERN,SIDE CARRIER,LH (Ref # 56077G)	56077-7465	1
PATTERN,SIDE CARRIER,RH (Ref # 56077H)	56077-7466	1

© 2026 Kawasaki Motors Corp., U.S.A.