2025 MULE PRO-FXR 1000 LE

PARTS DIAGRAM

Wheels/Tires

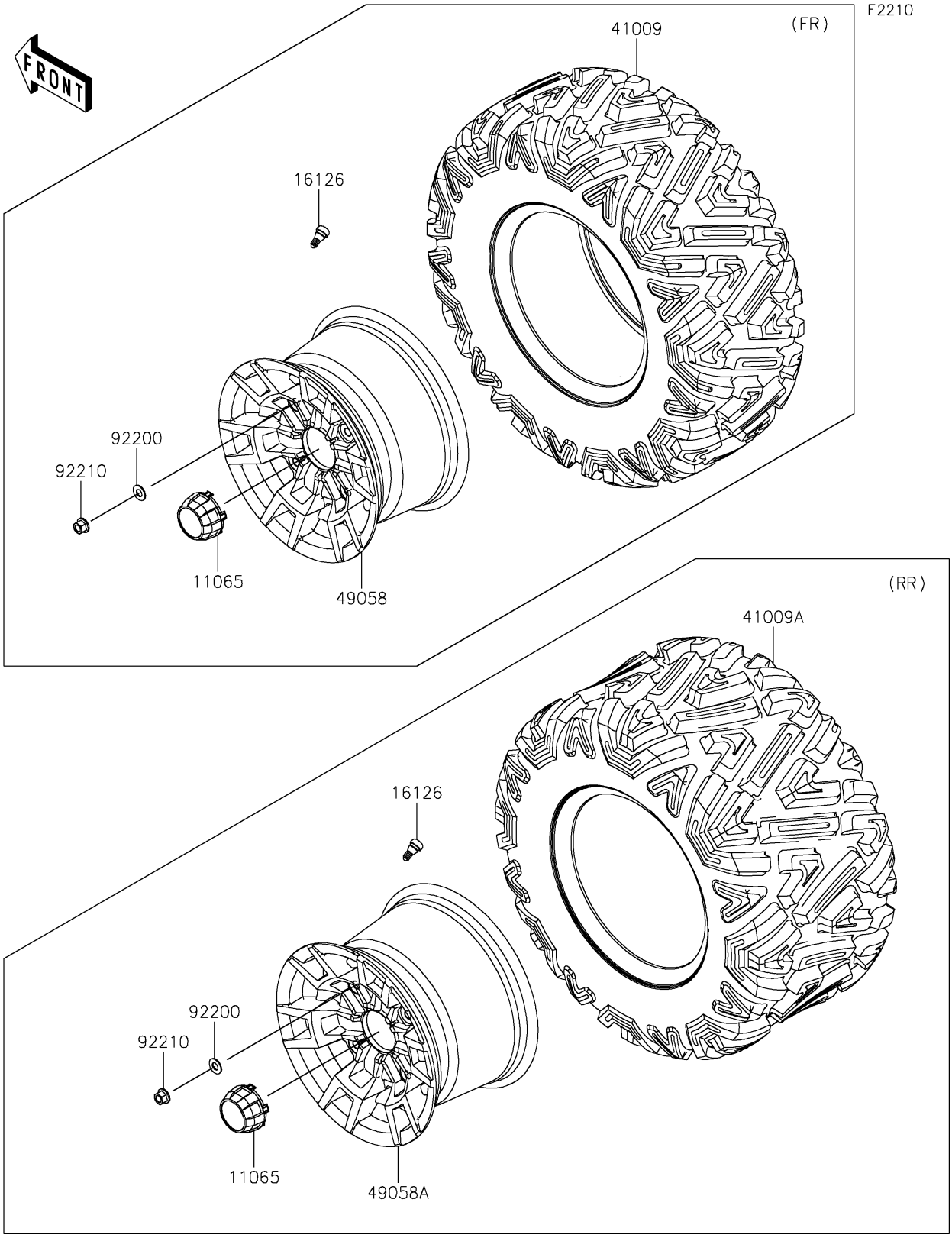

© 2026 Kawasaki Motors Corp., U.S.A.

2025 MULE PRO-FXR 1000 LE

PARTS LIST

Wheels/Tires

ITEM NAME	PART NUMBER	QUANTITY
CAP,WHEEL,F.BLACK (Ref # 11065)	11065-0893-6Z	4
VALVE (Ref # 16126)	16126-4001	4
TIRE,27X9.00-12 6PR,DURO PG2 (Ref # 41009)	41009-0723	2
TIRE,27X11.00-12 6PR,DURO PG2 (Ref # 41009A)	41009-0724	2
WHEEL,FR,12X7.0AT,AL,BLACK (Ref # 49058)	49058-0625-10	2
WHEEL,RR,12X8.0AT,AL,BLACK (Ref # 49058A)	49058-0626-10	2
WASHER,12.1X25X1.6 (Ref # 92200)	92200-0455	16
NUT,12MM (Ref # 92210)	92210-0603	16

© 2026 Kawasaki Motors Corp., U.S.A.