2027 MULE PRO-FXR 1000 LE

PARTS DIAGRAM

Drive Shaft-Rear

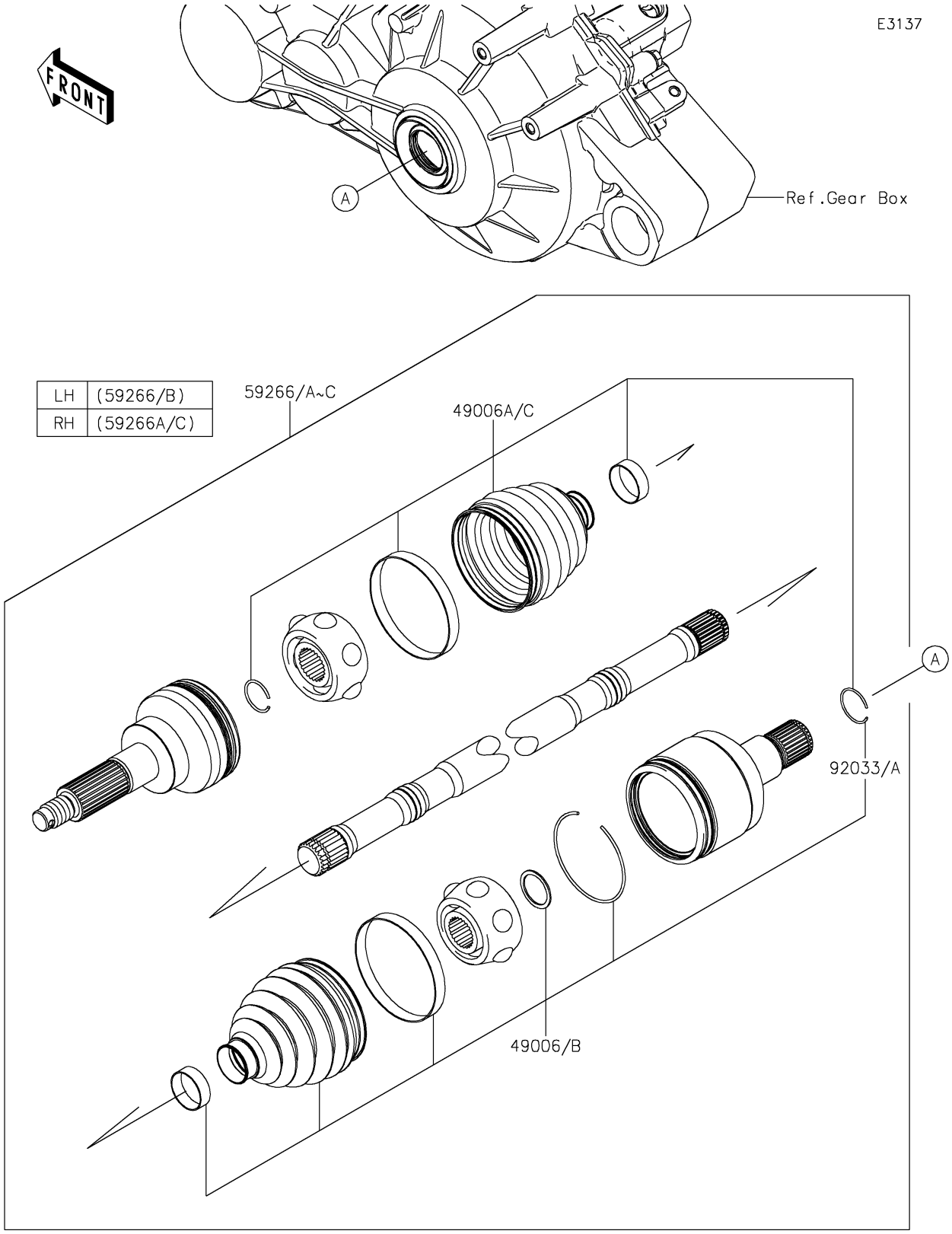

© 2026 Kawasaki Motors Corp., U.S.A.

2027 MULE PRO-FXR 1000 LE

PARTS LIST

Drive Shaft-Rear

ITEM NAME	PART NUMBER	QUANTITY
BOOT,INSIDE (Ref # 49006B)	49006-0634	2
BOOT,OUTSIDE (Ref # 49006C)	49006-0680	2
JOINT-BALL,RR,LH (Ref # 59266B)	59266-0727	1
JOINT-BALL,RR,RH (Ref # 59266C)	59266-0728	1
RING-SNAP (Ref # 92033A)	92033-0848	2

© 2026 Kawasaki Motors Corp., U.S.A.